ENGINEERING MECHANICS

# STATICS

J.L. MERIAM | L.G. KRAIGE

SEVENTH EDITION

CHAPTERS 1 & 2

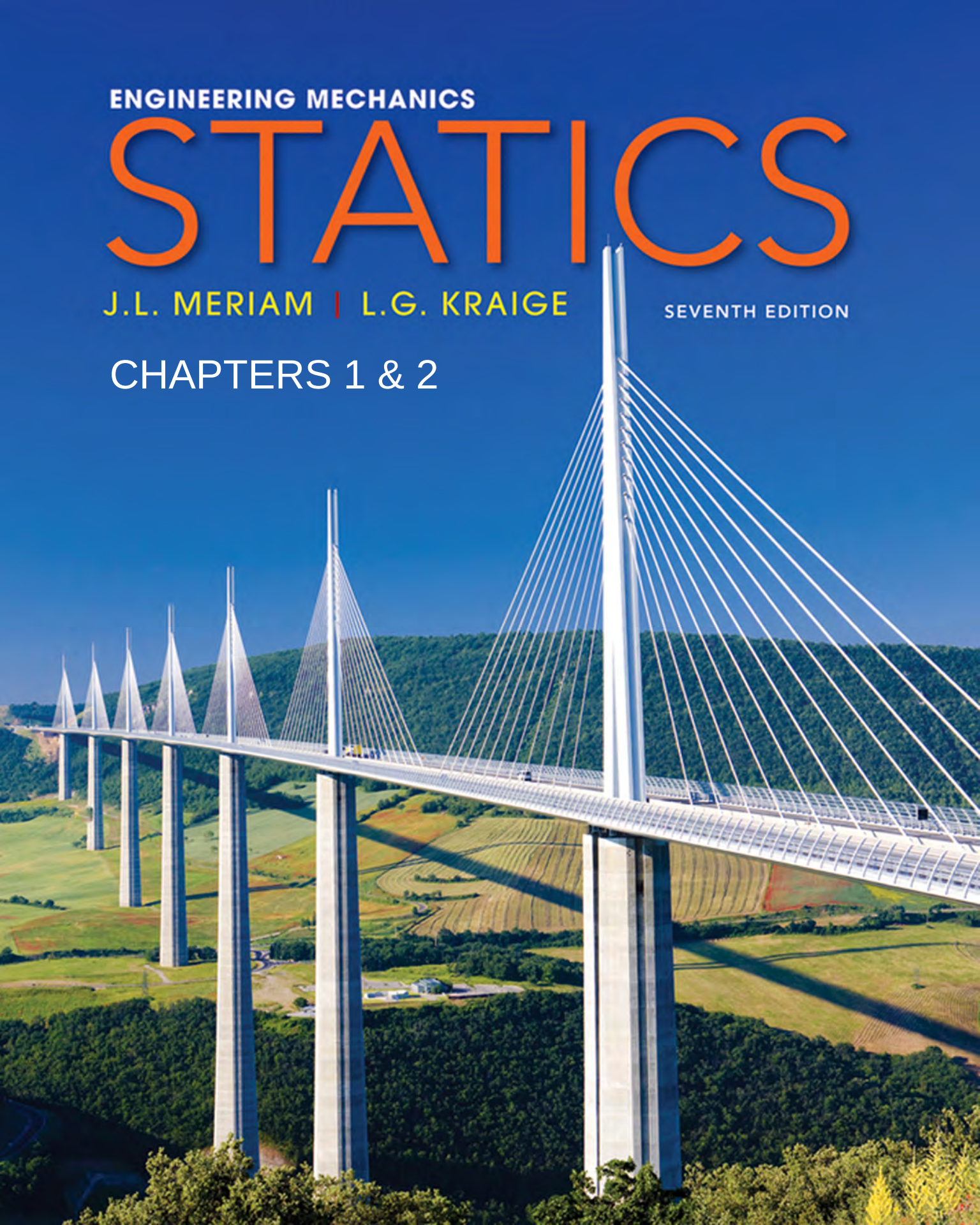

## Conversion Factors

U.S. Customary Units to SI Units

| To convert from | To | Multiply by |
|---|---|---|
| (*Acceleration*) | | |
| foot/second$^2$ (ft/sec$^2$) | meter/second$^2$ (m/s$^2$) | $3.048 \times 10^{-1}$* |
| inch/second$^2$ (in./sec$^2$) | meter/second$^2$ (m/s$^2$) | $2.54 \times 10^{-2}$* |
| (*Area*) | | |
| foot$^2$ (ft$^2$) | meter$^2$ (m$^2$) | $9.2903 \times 10^{-2}$ |
| inch$^2$ (in.$^2$) | meter$^2$ (m$^2$) | $6.4516 \times 10^{-4}$* |
| (*Density*) | | |
| pound mass/inch$^3$ (lbm/in.$^3$) | kilogram/meter$^3$ (kg/m$^3$) | $2.7680 \times 10^4$ |
| pound mass/foot$^3$ (lbm/ft$^3$) | kilogram/meter$^3$ (kg/m$^3$) | $1.6018 \times 10$ |
| (*Force*) | | |
| kip (1000 lb) | newton (N) | $4.4482 \times 10^3$ |
| pound force (lb) | newton (N) | 4.4482 |
| (*Length*) | | |
| foot (ft) | meter (m) | $3.048 \times 10^{-1}$* |
| inch (in.) | meter (m) | $2.54 \times 10^{-2}$* |
| mile (mi), (U.S. statute) | meter (m) | $1.6093 \times 10^3$ |
| mile (mi), (international nautical) | meter (m) | $1.852 \times 10^3$* |
| (*Mass*) | | |
| pound mass (lbm) | kilogram (kg) | $4.5359 \times 10^{-1}$ |
| slug (lb-sec$^2$/ft) | kilogram (kg) | $1.4594 \times 10$ |
| ton (2000 lbm) | kilogram (kg) | $9.0718 \times 10^2$ |
| (*Moment of force*) | | |
| pound-foot (lb-ft) | newton-meter (N · m) | 1.3558 |
| pound-inch (lb-in.) | newton-meter (N · m) | 0.1129 8 |
| (*Moment of inertia, area*) | | |
| inch$^4$ | meter$^4$ (m$^4$) | $41.623 \times 10^{-8}$ |
| (*Moment of inertia, mass*) | | |
| pound-foot-second$^2$ (lb-ft-sec$^2$) | kilogram-meter$^2$ (kg · m$^2$) | 1.3558 |
| (*Momentum, linear*) | | |
| pound-second (lb-sec) | kilogram-meter/second (kg · m/s) | 4.4482 |
| (*Momentum, angular*) | | |
| pound-foot-second (lb-ft-sec) | newton-meter-second (kg · m$^2$/s) | 1.3558 |
| (*Power*) | | |
| foot-pound/minute (ft-lb/min) | watt (W) | $2.2597 \times 10^{-2}$ |
| horsepower (550 ft-lb/sec) | watt (W) | $7.4570 \times 10^2$ |
| (*Pressure, stress*) | | |
| atmosphere (std)(14.7 lb/in.$^2$) | newton/meter$^2$ (N/m$^2$ or Pa) | $1.0133 \times 10^5$ |
| pound/foot$^2$ (lb/ft$^2$) | newton/meter$^2$ (N/m$^2$ or Pa) | $4.7880 \times 10$ |
| pound/inch$^2$ (lb/in.$^2$ or psi) | newton/meter$^2$ (N/m$^2$ or Pa) | $6.8948 \times 10^3$ |
| (*Spring constant*) | | |
| pound/inch (lb/in.) | newton/meter (N/m) | $1.7513 \times 10^2$ |
| (*Velocity*) | | |
| foot/second (ft/sec) | meter/second (m/s) | $3.048 \times 10^{-1}$* |
| knot (nautical mi/hr) | meter/second (m/s) | $5.1444 \times 10^{-1}$ |
| mile/hour (mi/hr) | meter/second (m/s) | $4.4704 \times 10^{-1}$* |
| mile/hour (mi/hr) | kilometer/hour (km/h) | 1.6093 |
| (*Volume*) | | |
| foot$^3$ (ft$^3$) | meter$^3$ (m$^3$) | $2.8317 \times 10^{-2}$ |
| inch$^3$ (in.$^3$) | meter$^3$ (m$^3$) | $1.6387 \times 10^{-5}$ |
| (*Work, Energy*) | | |
| British thermal unit (BTU) | joule (J) | $1.0551 \times 10^3$ |
| foot-pound force (ft-lb) | joule (J) | 1.3558 |
| kilowatt-hour (kw-h) | joule (J) | $3.60 \times 10^6$* |

*Exact value

## SI Units Used in Mechanics

| Quantity | Unit | SI Symbol |
|---|---|---|
| (*Base Units*) | | |
| Length | meter* | m |
| Mass | kilogram | kg |
| Time | second | s |
| (*Derived Units*) | | |
| Acceleration, linear | meter/second$^2$ | m/s$^2$ |
| Acceleration, angular | radian/second$^2$ | rad/s$^2$ |
| Area | meter$^2$ | m$^2$ |
| Density | kilogram/meter$^3$ | kg/m$^3$ |
| Force | newton | N (= kg · m/s$^2$) |
| Frequency | hertz | Hz (= 1/s) |
| Impulse, linear | newton-second | N · s |
| Impulse, angular | newton-meter-second | N · m · s |
| Moment of force | newton-meter | N · m |
| Moment of inertia, area | meter$^4$ | m$^4$ |
| Moment of inertia, mass | kilogram-meter$^2$ | kg · m$^2$ |
| Momentum, linear | kilogram-meter/second | kg · m/s (= N · s) |
| Momentum, angular | kilogram-meter$^2$/second | kg · m$^2$/s (= N · m · s) |
| Power | watt | W (= J/s = N · m/s) |
| Pressure, stress | pascal | Pa (= N/m$^2$) |
| Product of inertia, area | meter$^4$ | m$^4$ |
| Product of inertia, mass | kilogram-meter$^2$ | kg · m$^2$ |
| Spring constant | newton/meter | N/m |
| Velocity, linear | meter/second | m/s |
| Velocity, angular | radian/second | rad/s |
| Volume | meter$^3$ | m$^3$ |
| Work, energy | joule | J (= N · m) |
| (*Supplementary and Other Acceptable Units*) | | |
| Distance (navigation) | nautical mile | (= 1,852 km) |
| Mass | ton (metric) | t (= 1000 kg) |
| Plane angle | degrees (decimal) | ° |
| Plane angle | radian | — |
| Speed | knot | (1.852 km/h) |
| Time | day | d |
| Time | hour | h |
| Time | minute | min |

*Also spelled *metre*.

## SI Unit Prefixes

| Multiplication Factor | Prefix | Symbol |
|---|---|---|
| 1 000 000 000 000 = $10^{12}$ | tera | T |
| 1 000 000 000 = $10^{9}$ | giga | G |
| 1 000 000 = $10^{6}$ | mega | M |
| 1 000 = $10^{3}$ | kilo | k |
| 100 = $10^{2}$ | hecto | h |
| 10 = 10 | deka | da |
| 0.1 = $10^{-1}$ | deci | d |
| 0.01 = $10^{-2}$ | centi | c |
| 0.001 = $10^{-3}$ | milli | m |
| 0.000 001 = $10^{-6}$ | micro | $\mu$ |
| 0.000 000 001 = $10^{-9}$ | nano | n |
| 0.000 000 000 001 = $10^{-12}$ | pico | p |

## Selected Rules for Writing Metric Quantities

1. (a) Use prefixes to keep numerical values generally between 0.1 and 1000.
   (b) Use of the prefixes hecto, deka, deci, and centi should generally be avoided except for certain areas or volumes where the numbers would be awkward otherwise.
   (c) Use prefixes only in the numerator of unit combinations. The one exception is the base unit kilogram. (*Example:* write kN/m not N/mm; J/kg not mJ/g)
   (d) Avoid double prefixes. (*Example:* write GN not kMN)
2. Unit designations
   (a) Use a dot for multiplication of units. (*Example:* write N · m not Nm)
   (b) Avoid ambiguous double solidus. (*Example:* write N/m$^2$ not N/m/m)
   (c) Exponents refer to entire unit. (*Example:* mm$^2$ means (mm)$^2$)
3. Number grouping
   Use a space rather than a comma to separate numbers in groups of three, counting from the decimal point in both directions. *Example:* 4 607 321.048 72) Space may be omitted for numbers of four digits. (*Example:* 4296 or 0.0476)

# Contents

**Structures which support large forces must be designed with the principles of mechanics foremost in mind. In this view of New York, one can see a variety of such structures.**

© fotoVoyager/iStockphoto

# Introduction to Statics

# 1

## CHAPTER OUTLINE



## 1/1 Mechanics

Mechanics is the physical science which deals with the effects of forces on objects. No other subject plays a greater role in engineering analysis than mechanics. Although the principles of mechanics are few, they have wide application in engineering. The principles of mechanics are central to research and development in the fields of vibrations, stability and strength of structures and machines, robotics, rocket and spacecraft design, automatic control, engine performance, fluid flow, electrical machines and apparatus, and molecular, atomic, and subatomic behavior. A thorough understanding of this subject is an essential prerequisite for work in these and many other fields.

Mechanics is the oldest of the physical sciences. The early history of this subject is synonymous with the very beginnings of engineering. The earliest recorded writings in mechanics are those of Archimedes (287–212 B.C.) on the principle of the lever and the principle of buoyancy. Substantial progress came later with the formulation of the laws of vector combination of forces by Stevinus (1548–1620), who also formulated most of the principles of statics. The first investigation of a dynamics problem is credited to Galileo (1564–1642) for his experiments with falling stones. The accurate formulation of the laws of motion, as well as the law of gravitation, was made by Newton (1642–1727), who also conceived the idea of the infinitesimal in mathematical analysis. Substantial contributions to the development of mechanics were also made by da Vinci, Varignon, Euler, D'Alembert, Lagrange, Laplace, and others.

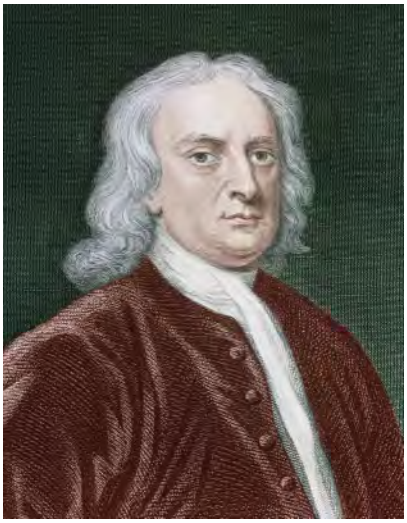

© S. Terry/Photo Researchers, Inc.

**Sir Isaac Newton**

In this book we will be concerned with both the development of the principles of mechanics and their application. The principles of mechanics as a science are rigorously expressed by mathematics, and thus

mathematics plays an important role in the application of these principles to the solution of practical problems.

The subject of mechanics is logically divided into two parts: ***statics***, which concerns the equilibrium of bodies under action of forces, and ***dynamics***, which concerns the motion of bodies. *Engineering Mechanics* is divided into these two parts, *Vol. 1 Statics* and *Vol. 2 Dynamics*.

## 1/2 Basic Concepts

The following concepts and definitions are basic to the study of mechanics, and they should be understood at the outset.

***Space*** is the geometric region occupied by bodies whose positions are described by linear and angular measurements relative to a coordinate system. For three-dimensional problems, three independent coordinates are needed. For two-dimensional problems, only two coordinates are required.

***Time*** is the measure of the succession of events and is a basic quantity in dynamics. Time is not directly involved in the analysis of statics problems.

***Mass*** is a measure of the inertia of a body, which is its resistance to a change of velocity. Mass can also be thought of as the quantity of matter in a body. The mass of a body affects the gravitational attraction force between it and other bodies. This force appears in many applications in statics.

***Force*** is the action of one body on another. A force tends to move a body in the direction of its action. The action of a force is characterized by its *magnitude*, by the *direction* of its action, and by its *point of application*. Thus force is a vector quantity, and its properties are discussed in detail in Chapter 2.

A ***particle*** is a body of negligible dimensions. In the mathematical sense, a particle is a body whose dimensions are considered to be near zero so that we may analyze it as a mass concentrated at a point. We often choose a particle as a differential element of a body. We may treat a body as a particle when its dimensions are irrelevant to the description of its position or the action of forces applied to it.

***Rigid body.*** A body is considered rigid when the change in distance between any two of its points is negligible for the purpose at hand. For instance, the calculation of the tension in the cable which supports the boom of a mobile crane under load is essentially unaffected by the small internal deformations in the structural members of the boom. For the purpose, then, of determining the external forces which act on the boom, we may treat it as a rigid body. Statics deals primarily with the calculation of external forces which act on rigid bodies in equilibrium. Determination of the internal deformations belongs to the study of the mechanics of deformable bodies, which normally follows statics in the curriculum.

## 1/3 Scalars and Vectors

We use two kinds of quantities in mechanics—scalars and vectors. *Scalar quantities* are those with which only a magnitude is associated. Examples of scalar quantities are time, volume, density, speed, energy,

and mass. *Vector quantities*, on the other hand, possess direction as well as magnitude, and must obey the parallelogram law of addition as described later in this article. Examples of vector quantities are displacement, velocity, acceleration, force, moment, and momentum. Speed is a scalar. It is the magnitude of velocity, which is a vector. Thus velocity is specified by a direction as well as a speed.

Vectors representing physical quantities can be classified as free, sliding, or fixed.

A ***free vector*** is one whose action is not confined to or associated with a unique line in space. For example, if a body moves without rotation, then the movement or displacement of any point in the body may be taken as a vector. This vector describes equally well the direction and magnitude of the displacement of every point in the body. Thus, we may represent the displacement of such a body by a free vector.

A ***sliding vector*** has a unique line of action in space but not a unique point of application. For example, when an external force acts on a rigid body, the force can be applied at any point along its line of action without changing its effect on the body as a whole,* and thus it is a sliding vector.

A ***fixed vector*** is one for which a unique point of application is specified. The action of a force on a deformable or nonrigid body must be specified by a fixed vector at the point of application of the force. In this instance the forces and deformations within the body depend on the point of application of the force, as well as on its magnitude and line of action.

## Conventions for Equations and Diagrams

A vector quantity **V** is represented by a line segment, Fig. 1/1, having the direction of the vector and having an arrowhead to indicate the sense. The length of the directed line segment represents to some convenient scale the magnitude $|\mathbf{V}|$ of the vector, which is printed with lightface italic type $V$. For example, we may choose a scale such that an arrow one inch long represents a force of twenty pounds.

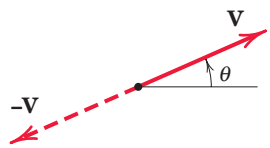


**Figure 1/1**

In scalar equations, and frequently on diagrams where only the magnitude of a vector is labeled, the symbol will appear in lightface italic type. Boldface type is used for vector quantities whenever the directional aspect of the vector is a part of its mathematical representation. When writing vector equations, *always* be certain to preserve the mathematical distinction between vectors and scalars. In handwritten work, use a distinguishing mark for each vector quantity, such as an underline, $\underline{V}$, or an arrow over the symbol, $\vec{V}$, to take the place of boldface type in print.

## Working with Vectors

The direction of the vector **V** may be measured by an angle $\theta$ from some known reference direction as shown in Fig. 1/1. The negative of **V** is a vector $-\mathbf{V}$ having the same magnitude as **V** but directed in the sense opposite to **V**, as shown in Fig. 1/1.

*This is the *principle of transmissibility*, which is discussed in Art. 2/2.

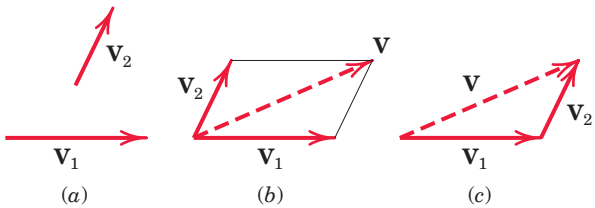


**Figure 1/2**

Vectors must obey the parallelogram law of combination. This law states that two vectors $\mathbf{V}_1$ and $\mathbf{V}_2$, treated as free vectors, Fig. 1/2*a*, may be replaced by their equivalent vector $\mathbf{V}$, which is the diagonal of the parallelogram formed by $\mathbf{V}_1$ and $\mathbf{V}_2$ as its two sides, as shown in Fig. 1/2*b*. This combination is called the *vector sum*, and is represented by the vector equation

$$\mathbf{V} = \mathbf{V}_1 + \mathbf{V}_2$$

where the plus sign, when used with the vector quantities (in boldface type), means *vector* and not *scalar* addition. The scalar sum of the magnitudes of the two vectors is written in the usual way as $V_1 + V_2$. The geometry of the parallelogram shows that $V \neq V_1 + V_2$.

The two vectors $\mathbf{V}_1$ and $\mathbf{V}_2$, again treated as free vectors, may also be added head-to-tail by the triangle law, as shown in Fig. 1/2*c*, to obtain the identical vector sum $\mathbf{V}$. We see from the diagram that the order of addition of the vectors does not affect their sum, so that $\mathbf{V}_1 + \mathbf{V}_2 = \mathbf{V}_2 + \mathbf{V}_1$.

The difference $\mathbf{V}_1 - \mathbf{V}_2$ between the two vectors is easily obtained by adding $-\mathbf{V}_2$ to $\mathbf{V}_1$ as shown in Fig. 1/3, where either the triangle or parallelogram procedure may be used. The difference $\mathbf{V}'$ between the two vectors is expressed by the vector equation

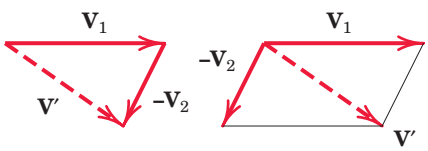


**Figure 1/3**

$$\mathbf{V}' = \mathbf{V}_1 - \mathbf{V}_2$$

where the minus sign denotes *vector subtraction*.

Any two or more vectors whose sum equals a certain vector $\mathbf{V}$ are said to be the *components* of that vector. Thus, the vectors $\mathbf{V}_1$ and $\mathbf{V}_2$ in Fig. 1/4*a* are the components of $\mathbf{V}$ in the directions 1 and 2, respectively. It is usually most convenient to deal with vector components which are mutually perpendicular; these are called *rectangular components*. The

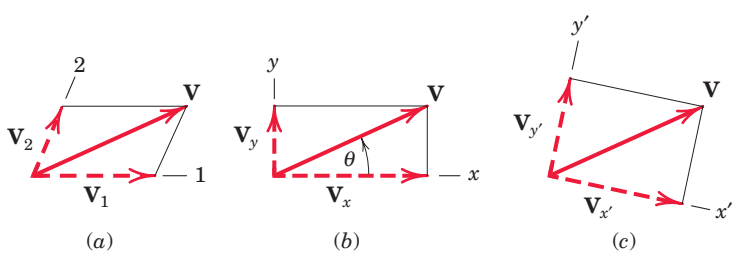


**Figure 1/4**

vectors $\mathbf{V}_x$ and $\mathbf{V}_y$ in Fig. 1/4*b* are the $x$- and $y$-components, respectively, of $\mathbf{V}$. Likewise, in Fig. 1/4*c*, $\mathbf{V}_{x'}$ and $\mathbf{V}_{y'}$ are the $x'$- and $y'$-components of $\mathbf{V}$. When expressed in rectangular components, the direction of the vector with respect to, say, the $x$-axis is clearly specified by the angle $\theta$, where

$$\theta = \tan^{-1}\frac{V_y}{V_x}$$

A vector $\mathbf{V}$ may be expressed mathematically by multiplying its magnitude $V$ by a vector $\mathbf{n}$ whose magnitude is one and whose direction coincides with that of $\mathbf{V}$. The vector $\mathbf{n}$ is called a *unit vector*. Thus,

$$\mathbf{V} = V\mathbf{n}$$

In this way both the magnitude and direction of the vector are conveniently contained in one mathematical expression. In many problems, particularly three-dimensional ones, it is convenient to express the rectangular components of $\mathbf{V}$, Fig. 1/5, in terms of unit vectors $\mathbf{i}$, $\mathbf{j}$, and $\mathbf{k}$, which are vectors in the $x$-, $y$-, and $z$-directions, respectively, with unit magnitudes. Because the vector $\mathbf{V}$ is the vector sum of the components in the $x$-, $y$-, and $z$-directions, we can express $\mathbf{V}$ as follows:

$$\mathbf{V} = V_x\mathbf{i} + V_y\mathbf{j} + V_z\mathbf{k}$$

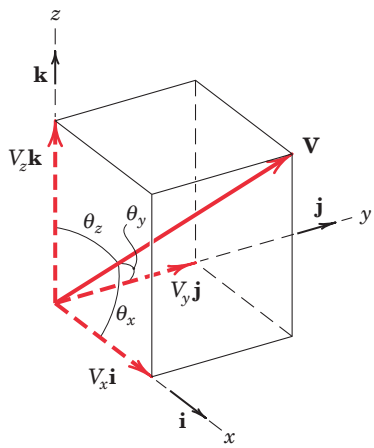


**Figure 1/5**

We now make use of the *direction cosines* $l$, $m$, and $n$ of $\mathbf{V}$, which are defined by

$$l = \cos\theta_x \qquad m = \cos\theta_y \qquad n = \cos\theta_z$$

Thus, we may write the magnitudes of the components of $\mathbf{V}$ as

$$V_x = lV \qquad V_y = mV \qquad V_z = nV$$

where, from the Pythagorean theorem,

$$V^2 = V_x^{\,2} + V_y^{\,2} + V_z^{\,2}$$

Note that this relation implies that $l^2 + m^2 + n^2 = 1$.

## 1/4 Newton's Laws

Sir Isaac Newton was the first to state correctly the basic laws governing the motion of a particle and to demonstrate their validity.* Slightly reworded with modern terminology, these laws are:

***Law I.*** A particle remains at rest or continues to move with *uniform velocity* (in a straight line with a constant speed) if there is no unbalanced force acting on it.

*Newton's original formulations may be found in the translation of his *Principia* (1687) revised by F. Cajori, University of California Press, 1934.

***Law II.*** The acceleration of a particle is proportional to the vector sum of forces acting on it, and is in the direction of this vector sum.

***Law III.*** The forces of action and reaction between interacting bodies are equal in magnitude, opposite in direction, and *collinear* (they lie on the same line).

The correctness of these laws has been verified by innumerable accurate physical measurements. Newton's second law forms the basis for most of the analysis in dynamics. As applied to a particle of mass $m$, it may be stated as

$$\mathbf{F} = m\mathbf{a} \tag{1/1}$$

where $\mathbf{F}$ is the vector sum of forces acting on the particle and $\mathbf{a}$ is the resulting acceleration. This equation is a *vector* equation because the direction of $\mathbf{F}$ must agree with the direction of $\mathbf{a}$, and the magnitudes of $\mathbf{F}$ and $m\mathbf{a}$ must be equal.

Newton's first law contains the principle of the equilibrium of forces, which is the main topic of concern in statics. This law is actually a consequence of the second law, since there is no acceleration when the force is zero, and the particle either is at rest or is moving with a uniform velocity. The first law adds nothing new to the description of motion but is included here because it was part of Newton's classical statements.

The third law is basic to our understanding of force. It states that forces always occur in pairs of equal and opposite forces. Thus, the downward force exerted on the desk by the pencil is accompanied by an upward force of equal magnitude exerted on the pencil by the desk. This principle holds for all forces, variable or constant, regardless of their source, and holds at every instant of time during which the forces are applied. Lack of careful attention to this basic law is the cause of frequent error by the beginner.

In the analysis of bodies under the action of forces, it is absolutely necessary to be clear about which force of each action–reaction pair is being considered. It is necessary first of all to *isolate* the body under consideration and then to consider only the one force of the pair which acts *on* the body in question.

## 1/5 Units

In mechanics we use four fundamental quantities called *dimensions*. These are length, mass, force, and time. The units used to measure these quantities cannot all be chosen independently because they must be consistent with Newton's second law, Eq. 1/1. Although there are a number of different systems of units, only the two systems most commonly used in science and technology will be used in this text. The four fundamental dimensions and their units and symbols in the two systems are summarized in the following table.

| QUANTITY | DIMENSIONAL SYMBOL | SI UNITS | | | U.S. CUSTOMARY UNITS | | |
|---|---|---|---|---|---|---|---|
| | | | UNIT | SYMBOL | | UNIT | SYMBOL |
| Mass | M | Base units | kilogram | kg | | slug | — |
| Length | L | | meter | m | Base units | foot | ft |
| Time | T | | second | s | | second | sec |
| Force | F | | newton | N | | pound | lb |

## SI Units

The International System of Units, abbreviated SI (from the French, Système International d'Unités), is accepted in the United States and throughout the world, and is a modern version of the metric system. By international agreement, SI units will in time replace other systems. As shown in the table, in SI, the units kilogram (kg) for mass, meter (m) for length, and second (s) for time are selected as the base units, and the newton (N) for force is derived from the preceding three by Eq. 1/1. Thus, force (N) = mass (kg) × acceleration (m/s$^2$) or

$$\text{N} = \text{kg}\cdot\text{m/s}^2$$

Thus, 1 newton is the force required to give a mass of 1 kg an acceleration of 1 m/s$^2$.

Consider a body of mass $m$ which is allowed to fall freely near the surface of the earth. With only the force of gravitation acting on the body, it falls with an acceleration $g$ toward the center of the earth. This gravitational force is the *weight* $W$ of the body, and is found from Eq. 1/1:

$$W\,(\text{N}) = m\,(\text{kg}) \times g\,(\text{m/s}^2)$$

## U.S. Customary Units

The U.S. customary, or British system of units, also called the foot-pound-second (FPS) system, has been the common system in business and industry in English-speaking countries. Although this system will in time be replaced by SI units, for many more years engineers must be able to work with both SI units and FPS units, and both systems are used freely in *Engineering Mechanics*.

As shown in the table, in the U.S. or FPS system, the units of feet (ft) for length, seconds (sec) for time, and pounds (lb) for force are selected as base units, and the slug for mass is derived from Eq. 1/1. Thus, force (lb) = mass (slugs) × acceleration (ft/sec$^2$), or

$$\text{slug} = \frac{\text{lb-sec}^2}{\text{ft}}$$

Therefore, 1 slug is the mass which is given an acceleration of 1 ft/sec$^2$ when acted on by a force of 1 lb. If $W$ is the gravitational force or weight and $g$ is the acceleration due to gravity, Eq. 1/1 gives

$$m\,(\text{slugs}) = \frac{W\,(\text{lb})}{g\,(\text{ft/sec}^2)}$$

Note that seconds is abbreviated as *s* in SI units, and as *sec* in FPS units.

In U.S. units the pound is also used on occasion as a unit of mass, especially to specify thermal properties of liquids and gases. When distinction between the two units is necessary, the force unit is frequently written as lbf and the mass unit as lbm. In this book we use almost exclusively the force unit, which is written simply as lb. Other common units of force in the U.S. system are the *kilopound* (kip), which equals 1000 lb, and the *ton*, which equals 2000 lb.

The International System of Units (SI) is termed an *absolute* system because the measurement of the base quantity mass is independent of its environment. On the other hand, the U.S. system (FPS) is termed a *gravitational* system because its base quantity force is defined as the gravitational attraction (weight) acting on a standard mass under specified conditions (sea level and 45° latitude). A standard pound is also the force required to give a one-pound mass an acceleration of 32.1740 ft/sec$^2$.

In SI units the kilogram is used *exclusively* as a unit of mass—*never* force. In the MKS (meter, kilogram, second) gravitational system, which has been used for many years in non-English-speaking countries, the kilogram, like the pound, has been used both as a unit of force and as a unit of mass.

## Primary Standards

Primary standards for the measurements of mass, length, and time have been established by international agreement and are as follows:

© Omikron/Photo Researchers, Inc.

**The standard kilogram**

***Mass.*** The kilogram is defined as the mass of a specific platinum–iridium cylinder which is kept at the International Bureau of Weights and Measures near Paris, France. An accurate copy of this cylinder is kept in the United States at the National Institute of Standards and Technology (NIST), formerly the National Bureau of Standards, and serves as the standard of mass for the United States.

***Length.*** The meter, originally defined as one ten-millionth of the distance from the pole to the equator along the meridian through Paris, was later defined as the length of a specific platinum–iridium bar kept at the International Bureau of Weights and Measures. The difficulty of accessing the bar and reproducing accurate measurements prompted the adoption of a more accurate and reproducible standard of length for the meter, which is now defined as 1 650 763.73 wavelengths of a specific radiation of the krypton-86 atom.

***Time.*** The second was originally defined as the fraction 1/(86 400) of the mean solar day. However, irregularities in the earth's rotation led to difficulties with this definition, and a more accurate and reproducible standard has been adopted. The second is now defined as the duration of 9 192 631 770 periods of the radiation of a specific state of the cesium-133 atom.

For most engineering work, and for our purpose in studying mechanics, the accuracy of these standards is considerably beyond our

needs. The standard value for gravitational acceleration $g$ is its value at sea level and at a 45° latitude. In the two systems these values are

$$\text{SI units} \qquad g = 9.806\,65 \text{ m/s}^2$$

$$\text{U.S. units} \qquad g = 32.1740 \text{ ft/sec}^2$$

The approximate values of 9.81 m/s$^2$ and 32.2 ft/sec$^2$, respectively, are sufficiently accurate for the vast majority of engineering calculations.

## Unit Conversions

The characteristics of SI units are shown inside the front cover of this book, along with the numerical conversions between U.S. customary and SI units. In addition, charts giving the approximate conversions between selected quantities in the two systems appear inside the back cover for convenient reference. Although these charts are useful for obtaining a feel for the relative size of SI and U.S. units, in time engineers will find it essential to think directly in terms of SI units without converting from U.S. units. In statics we are primarily concerned with the units of length and force, with mass needed only when we compute gravitational force, as explained previously.

Figure 1/6 depicts examples of force, mass, and length in the two systems of units, to aid in visualizing their relative magnitudes.

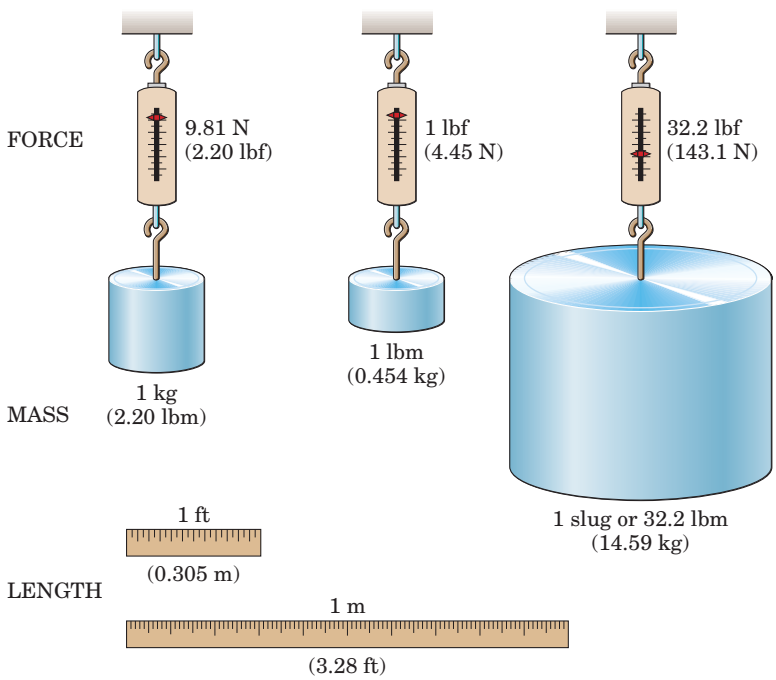


**Figure 1/6**

## 1/6 Law of Gravitation

In statics as well as dynamics we often need to compute the weight of a body, which is the gravitational force acting on it. This computation depends on the *law of gravitation*, which was also formulated by Newton. The law of gravitation is expressed by the equation

$$F = G\frac{m_1 m_2}{r^2} \tag{1/2}$$

where $F$ = the mutual force of attraction between two particles
$G$ = a universal constant known as the *constant of gravitation*
$m_1, m_2$ = the masses of the two particles
$r$ = the distance between the centers of the particles

The mutual forces $F$ obey the law of action and reaction, since they are equal and opposite and are directed along the line joining the centers of the particles, as shown in Fig. 1/7. By experiment the gravitational constant is found to be $G = 6.673(10^{-11})\ \mathrm{m^3/(kg \cdot s^2)}$.

### Gravitational Attraction of the Earth

NASA Marshall Space Flight Center (NASA-MSFC)

**The gravitational force which the earth exerts on the moon (foreground) is a key factor in the motion of the moon.**

Gravitational forces exist between every pair of bodies. On the surface of the earth the only gravitational force of appreciable magnitude is the force due to the attraction of the earth. For example, each of two iron spheres 100 mm in diameter is attracted to the earth with a gravitational force of 37.1 N, which is its weight. On the other hand, the force of mutual attraction between the spheres if they are just touching is 0.000 000 095 1 N. This force is clearly negligible compared with the earth's attraction of 37.1 N. Consequently the gravitational attraction of the earth is the only gravitational force we need to consider for most engineering applications on the earth's surface.

The gravitational attraction of the earth on a body (its weight) exists whether the body is at rest or in motion. Because this attraction is a force, the weight of a body should be expressed in newtons (N) in SI units and in pounds (lb) in U.S. customary units. Unfortunately in common practice the mass unit kilogram (kg) has been frequently used as a measure of weight. This usage should disappear in time as SI units become more widely used, because in SI units the kilogram is used exclusively for mass and the newton is used for force, including weight.

For a body of mass $m$ near the surface of the earth, the gravitational attraction $F$ on the body is specified by Eq. 1/2. We usually denote the

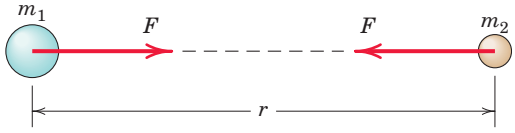


**Figure 1/7**

magnitude of this gravitational force or weight with the symbol $W$. Because the body falls with an acceleration $g$, Eq. 1/1 gives

$$W = mg \tag{1/3}$$

The weight $W$ will be in newtons (N) when the mass $m$ is in kilograms (kg) and the acceleration of gravity $g$ is in meters per second squared ($m/s^2$). In U.S. customary units, the weight $W$ will be in pounds (lb) when $m$ is in slugs and $g$ is in feet per second squared. The standard values for $g$ of 9.81 $m/s^2$ and 32.2 $ft/sec^2$ will be sufficiently accurate for our calculations in statics.

The true weight (gravitational attraction) and the apparent weight (as measured by a spring scale) are slightly different. The difference, which is due to the rotation of the earth, is quite small and will be neglected. This effect will be discussed in *Vol. 2 Dynamics*.

## 1/7 Accuracy, Limits, and Approximations

The number of significant figures in an answer should be no greater than the number of figures justified by the accuracy of the given data. For example, suppose the 24-mm side of a square bar was measured to the nearest millimeter, so we know the side length to two significant figures. Squaring the side length gives an area of 576 $mm^2$. However, according to our rule, we should write the area as 580 $mm^2$, using only two significant figures.

When calculations involve small differences in large quantities, greater accuracy in the data is required to achieve a given accuracy in the results. Thus, for example, it is necessary to know the numbers 4.2503 and 4.2391 to an accuracy of five significant figures to express their difference 0.0112 to three-figure accuracy. It is often difficult in lengthy computations to know at the outset how many significant figures are needed in the original data to ensure a certain accuracy in the answer. Accuracy to three significant figures is considered satisfactory for most engineering calculations.

In this text, answers will generally be shown to three significant figures unless the answer begins with the digit 1, in which case the answer will be shown to four significant figures. For purposes of calculation, consider all data given in this book to be exact.

### Differentials

The *order* of differential quantities frequently causes misunderstanding in the derivation of equations. Higher-order differentials may always be neglected compared with lower-order differentials when the mathematical limit is approached. For example, the element of volume $\Delta V$ of a right circular cone of altitude $h$ and base radius $r$ may be taken to be a circular slice a distance $x$ from the vertex and of thickness $\Delta x$. The expression for the volume of the element is

$$\Delta V = \frac{\pi r^2}{h^2}\left[x^2\,\Delta x + x(\Delta x)^2 + \frac{1}{3}(\Delta x)^3\right]$$

Note that, when passing to the limit in going from $\Delta V$ to $dV$ and from $\Delta x$ to $dx$, the terms containing $(\Delta x)^2$ and $(\Delta x)^3$ drop out, leaving merely

$$dV = \frac{\pi r^2}{h^2} x^2 \, dx$$

which gives an exact expression when integrated.

### Small-Angle Approximations

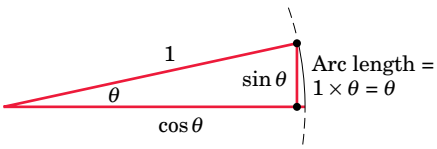


**Figure 1/8**

When dealing with small angles, we can usually make use of simplifying approximations. Consider the right triangle of Fig. 1/8 where the angle $\theta$, expressed in radians, is relatively small. If the hypotenuse is unity, we see from the geometry of the figure that the arc length $1 \times \theta$ and $\sin\theta$ are very nearly the same. Also $\cos\theta$ is close to unity. Furthermore, $\sin\theta$ and $\tan\theta$ have almost the same values. Thus, for small angles we may write

$$\sin\theta \cong \tan\theta \cong \theta \qquad \cos\theta \cong 1$$

provided that the angles are expressed in radians. These approximations may be obtained by retaining only the first terms in the series expansions for these three functions. As an example of these approximations, for an angle of 1°

$$1^\circ = 0.017\,453 \text{ rad} \qquad \tan 1^\circ = 0.017\,455$$

$$\sin 1^\circ = 0.017\,452 \qquad \cos 1^\circ = 0.999\,848$$

If a more accurate approximation is desired, the first two terms may be retained, and they are

$$\sin\theta \cong \theta - \theta^3/6 \qquad \tan\theta \cong \theta + \theta^3/3 \qquad \cos\theta \cong 1 - \theta^2/2$$

where the angles must be expressed in radians. (To convert degrees to radians, multiply the angle in degrees by $\pi/180°$.) The error in replacing the sine by the angle for 1° (0.0175 rad) is only 0.005 percent. For 5° (0.0873 rad) the error is 0.13 percent, and for 10° (0.1745 rad), the error is still only 0.51 percent. As the angle $\theta$ approaches zero, the following relations are true in the mathematical limit:

$$\sin d\theta = \tan d\theta = d\theta \qquad \cos d\theta = 1$$

where the differential angle $d\theta$ must be expressed in radians.

## 1/8 Problem Solving in Statics

We study statics to obtain a quantitative description of forces which act on engineering structures in equilibrium. Mathematics establishes the relations between the various quantities involved and enables us to predict effects from these relations. We use a dual thought process in

solving statics problems: We think about both the physical situation and the corresponding mathematical description. In the analysis of every problem, we make a transition between the physical and the mathematical. One of the most important goals for the student is to develop the ability to make this transition freely.

## Making Appropriate Assumptions

We should recognize that the mathematical formulation of a physical problem represents an ideal description, or *model*, which approximates but never quite matches the actual physical situation. When we construct an idealized mathematical model for a given engineering problem, certain approximations will always be involved. Some of these approximations may be mathematical, whereas others will be physical.

For instance, it is often necessary to neglect small distances, angles, or forces compared with large distances, angles, or forces. Suppose a force is distributed over a small area of the body on which it acts. We may consider it to be a concentrated force if the dimensions of the area involved are small compared with other pertinent dimensions.

We may neglect the weight of a steel cable if the tension in the cable is many times greater than its total weight. However, if we must calculate the deflection or sag of a suspended cable under the action of its weight, we may not ignore the cable weight.

Thus, what we may assume depends on what information is desired and on the accuracy required. We must be constantly alert to the various assumptions called for in the formulation of real problems. The ability to understand and make use of the appropriate assumptions in the formulation and solution of engineering problems is certainly one of the most important characteristics of a successful engineer. One of the major aims of this book is to provide many opportunities to develop this ability through the formulation and analysis of many practical problems involving the principles of statics.

## Using Graphics

Graphics is an important analytical tool for three reasons:

1. We use graphics to represent a physical system on paper with a sketch or diagram. Representing a problem geometrically helps us with its physical interpretation, especially when we must visualize three-dimensional problems.
2. We can often obtain a graphical solution to problems more easily than with a direct mathematical solution. Graphical solutions are both a practical way to obtain results, and an aid in our thought processes. Because graphics represents the physical situation and its mathematical expression simultaneously, graphics helps us make the transition between the two.
3. Charts or graphs are valuable aids for representing results in a form which is easy to understand.

## KEY CONCEPTS

### Formulating Problems and Obtaining Solutions

In statics, as in all engineering problems, we need to use a precise and logical method for formulating problems and obtaining their solutions. We formulate each problem and develop its solution through the following sequence of steps.

1. Formulate the problem:
   (*a*) State the given data.
   (*b*) State the desired result.
   (*c*) State your assumptions and approximations.
2. Develop the solution:
   (*a*) Draw any diagrams you need to understand the relationships.
   (*b*) State the governing principles to be applied to your solution.
   (*c*) Make your calculations.
   (*d*) Ensure that your calculations are consistent with the accuracy justified by the data.
   (*e*) Be sure that you have used consistent units throughout your calculations.
   (*f*) Ensure that your answers are reasonable in terms of magnitudes, directions, common sense, etc.
   (*g*) Draw conclusions.

Keeping your work neat and orderly will help your thought process and enable others to understand your work. The discipline of doing orderly work will help you develop skill in formulation and analysis. Problems which seem complicated at first often become clear when you approach them with logic and discipline.

## The Free-Body Diagram

The subject of statics is based on surprisingly few fundamental concepts and involves mainly the application of these basic relations to a variety of situations. In this application the *method* of analysis is all important. In solving a problem, it is essential that the laws which apply be carefully fixed in mind and that we apply these principles literally and exactly. In applying the principles of mechanics to analyze forces acting on a body, it is essential that we *isolate* the body in question from all other bodies so that a complete and accurate account of all forces acting on this body can be taken. This *isolation* should exist mentally and should be represented on paper. The diagram of such an isolated body with the representation of *all* external forces acting *on* it is called a *free-body diagram*.

The free-body-diagram method is the key to the understanding of mechanics. This is so because the *isolation* of a body is the tool by which

*cause* and *effect* are clearly separated, and by which our attention is clearly focused on the literal application of a principle of mechanics. The technique of drawing free-body diagrams is covered in Chapter 3, where they are first used.

## Numerical Values versus Symbols

In applying the laws of statics, we may use numerical values to represent quantities, or we may use algebraic symbols, and leave the answer as a formula. When numerical values are used, the magnitude of each quantity expressed in its particular units is evident at each stage of the calculation. This is useful when we need to know the magnitude of each term.

The symbolic solution, however, has several advantages over the numerical solution. First, the use of symbols helps to focus our attention on the connection between the physical situation and its related mathematical description. Second, we can use a symbolic solution repeatedly for obtaining answers to the same type of problem, but having different units or numerical values. Third, a symbolic solution enables us to make a dimensional check at every step, which is more difficult to do when numerical values are used. In any equation representing a physical situation, the dimensions of every term on both sides of the equation must be the same. This property is called *dimensional homogeneity*.

Thus, facility with both numerical and symbolic forms of solution is essential.

## Solution Methods

Solutions to the problems of statics may be obtained in one or more of the following ways.

1. Obtain mathematical solutions by hand, using either algebraic symbols or numerical values. We can solve most problems this way.
2. Obtain graphical solutions for certain problems.
3. Solve problems by computer. This is useful when a large number of equations must be solved, when a parameter variation must be studied, or when an intractable equation must be solved.

Many problems can be solved with two or more of these methods. The method utilized depends partly on the engineer's preference and partly on the type of problem to be solved. The choice of the most expedient method of solution is an important aspect of the experience to be gained from the problem work. There are a number of problems in *Vol. 1 Statics* which are designated as *Computer-Oriented Problems*. These problems appear at the end of the Review Problem sets and are selected to illustrate the type of problem for which solution by computer offers a distinct advantage.

## 1/9 Chapter Review

This chapter has introduced the concepts, definitions, and units used in statics, and has given an overview of the procedure used to formulate and solve problems in statics. Now that you have finished this chapter, you should be able to do the following:

1. Express vectors in terms of unit vectors and perpendicular components, and perform vector addition and subtraction.
2. State Newton's laws of motion.
3. Perform calculations using SI and U.S. customary units, using appropriate accuracy.
4. Express the law of gravitation and calculate the weight of an object.
5. Apply simplifications based on differential and small-angle approximations.
6. Describe the methodology used to formulate and solve statics problems.

## SAMPLE PROBLEM 1/1

Determine the weight in newtons of a car whose mass is 1400 kg. Convert the mass of the car to slugs and then determine its weight in pounds.

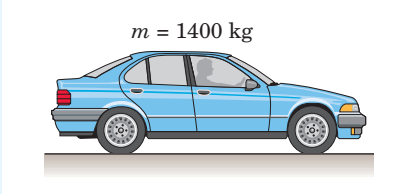


**Solution.** From relationship 1/3, we have

1 $$W = mg = 1400(9.81) = 13\,730 \text{ N} \qquad \textit{Ans.}$$

From the table of conversion factors inside the front cover of the textbook, we see that 1 slug is equal to 14.594 kg. Thus, the mass of the car in slugs is

2 $$m = 1400 \text{ kg}\left[\frac{1 \text{ slug}}{14.594 \text{ kg}}\right] = 95.9 \text{ slugs} \qquad \textit{Ans.}$$

Finally, its weight in pounds is

3 $$W = mg = (95.9)(32.2) = 3090 \text{ lb} \qquad \textit{Ans.}$$

As another route to the last result, we can convert from kg to lbm. Again using the table inside the front cover, we have

$$m = 1400 \text{ kg}\left[\frac{1 \text{ lbm}}{0.45359 \text{ kg}}\right] = 3090 \text{ lbm}$$

The weight in pounds associated with the mass of 3090 lbm is 3090 lb, as calculated above. We recall that 1 lbm is the amount of mass which under standard conditions has a weight of 1 lb of force. We rarely refer to the U.S. mass unit lbm in this textbook series, but rather use the slug for mass. The sole use of slug, rather than the unnecessary use of two units for mass, will prove to be powerful and simple—especially in dynamics.

### Helpful Hints

1 Our calculator indicates a result of 13 734 N. Using the rules of significant-figure display used in this textbook, we round the written result to four significant figures, or 13 730 N. Had the number begun with any digit other than 1, we would have rounded to three significant figures.

2 A good practice with unit conversion is to multiply by a factor such as $\left[\frac{1 \text{ slug}}{14.594 \text{ kg}}\right]$, which has a value of 1, because the numerator and the denominator are equivalent. Make sure that cancellation of the units leaves the units desired; here the units of kg cancel, leaving the desired units of slug.

3 Note that we are using a previously calculated result (95.9 slugs). We must be sure that when a calculated number is needed in subsequent calculations, it is retained in the calculator to its full accuracy, (95.929834 . . .) until it is needed. This may require storing it in a register upon its initial calculation and recalling it later. We must not merely punch 95.9 into our calculator and proceed to multiply by 32.2—this practice will result in loss of numerical accuracy. Some individuals like to place a small indication of the storage register used in the right margin of the work paper, directly beside the number stored.

## SAMPLE PROBLEM 1/2

Use Newton's law of universal gravitation to calculate the weight of a 70-kg person standing on the surface of the earth. Then repeat the calculation by using $W = mg$ and compare your two results. Use Table D/2 as needed.

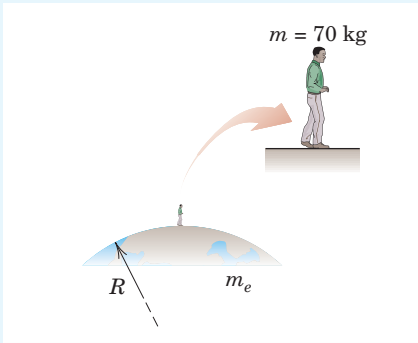


**Solution.** The two results are

1 $$W = \frac{Gm_e m}{R^2} = \frac{(6.673 \cdot 10^{-11})(5.976 \cdot 10^{24})(70)}{[6371 \cdot 10^3]^2} = 688 \text{ N} \qquad \textit{Ans.}$$

$$W = mg = 70(9.81) = 687 \text{ N} \qquad \textit{Ans.}$$

The discrepancy is due to the fact that Newton's universal gravitational law does not take into account the rotation of the earth. On the other hand, the value $g = 9.81 \text{ m/s}^2$ used in the second equation does account for the earth's rotation. Note that had we used the more accurate value $g = 9.80665 \text{ m/s}^2$ (which likewise accounts for the earth's rotation) in the second equation, the discrepancy would have been larger (686 N would have been the result).

### Helpful Hint

1 The effective distance between the mass centers of the two bodies involved is the radius of the earth.

## SAMPLE PROBLEM 1/3

For the vectors $\mathbf{V}_1$ and $\mathbf{V}_2$ shown in the figure,

(*a*) determine the magnitude $S$ of their vector sum $\mathbf{S} = \mathbf{V}_1 + \mathbf{V}_2$

(*b*) determine the angle $\alpha$ between $\mathbf{S}$ and the positive $x$-axis

(*c*) write $\mathbf{S}$ as a vector in terms of the unit vectors $\mathbf{i}$ and $\mathbf{j}$ and then write a unit vector $\mathbf{n}$ along the vector sum $\mathbf{S}$

(*d*) determine the vector difference $\mathbf{D} = \mathbf{V}_1 - \mathbf{V}_2$

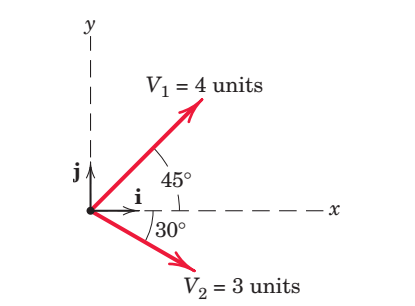


**Solution** (*a*) We construct to scale the parallelogram shown in Fig. *a* for adding $\mathbf{V}_1$ and $\mathbf{V}_2$. Using the law of cosines, we have

$$S^2 = 3^2 + 4^2 - 2(3)(4)\cos 105°$$

$$S = 5.59 \text{ units} \qquad \textit{Ans.}$$

1 (*b*) Using the law of sines for the lower triangle, we have

$$\frac{\sin 105°}{5.59} = \frac{\sin(\alpha + 30°)}{4}$$

$$\sin(\alpha + 30°) = 0.692$$

$$(\alpha + 30°) = 43.8° \qquad \alpha = 13.76° \qquad \textit{Ans.}$$

(*c*) With knowledge of both $S$ and $\alpha$, we can write the vector $\mathbf{S}$ as

$$\mathbf{S} = S[\mathbf{i}\cos\alpha + \mathbf{j}\sin\alpha]$$

$$= 5.59[\mathbf{i}\cos 13.76° + \mathbf{j}\sin 13.76°] = 5.43\mathbf{i} + 1.328\mathbf{j} \text{ units} \qquad \textit{Ans.}$$

2 Then $$\mathbf{n} = \frac{\mathbf{S}}{S} = \frac{5.43\mathbf{i} + 1.328\mathbf{j}}{5.59} = 0.971\mathbf{i} + 0.238\mathbf{j} \qquad \textit{Ans.}$$

(*d*) The vector difference $\mathbf{D}$ is

$$\mathbf{D} = \mathbf{V}_1 - \mathbf{V}_2 = 4(\mathbf{i}\cos 45° + \mathbf{j}\sin 45°) - 3(\mathbf{i}\cos 30° - \mathbf{j}\sin 30°)$$

$$= 0.230\mathbf{i} + 4.33\mathbf{j} \text{ units} \qquad \textit{Ans.}$$

The vector $\mathbf{D}$ is shown in Fig. *b* as $\mathbf{D} = \mathbf{V}_1 + (-\mathbf{V}_2)$.

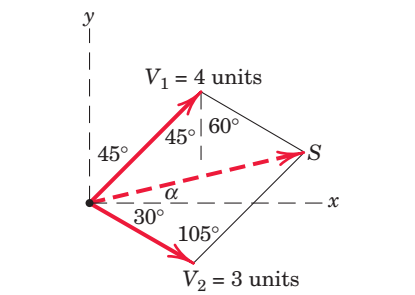


(*a*)

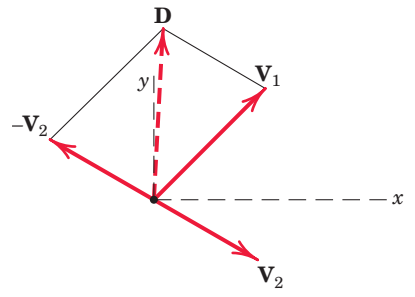


(*b*)

### Helpful Hints

1 You will frequently use the laws of cosines and sines in mechanics. See Art. C/6 of Appendix C for a review of these important geometric principles.

2 A unit vector may always be formed by dividing a vector by its magnitude. Note that a unit vector is dimensionless.

## PROBLEMS

**1/1** Determine the angles made by the vector $\mathbf{V} = 40\mathbf{i} - 30\mathbf{j}$ with the positive $x$- and $y$-axes. Write the unit vector $\mathbf{n}$ in the direction of $\mathbf{V}$.

**1/2** Determine the magnitude of the vector sum $\mathbf{V} = \mathbf{V}_1 + \mathbf{V}_2$ and the angle $\theta_x$ which $\mathbf{V}$ makes with the positive $x$-axis. Complete both graphical and algebraic solutions.

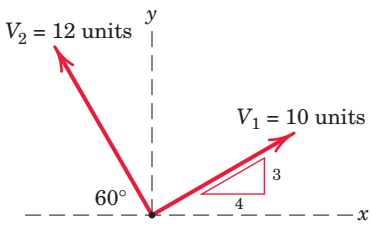


**Problem 1/2**

**1/3** For the given vectors $\mathbf{V}_1$ and $\mathbf{V}_2$ of Prob. 1/2, determine the magnitude of the vector difference $\mathbf{V}' = \mathbf{V}_2 - \mathbf{V}_1$ and the angle $\theta_x$ which $\mathbf{V}'$ makes with the positive $x$-axis. Complete both graphical and algebraic solutions.

**1/4** A force is specified by the vector $\mathbf{F} = 120\mathbf{i} - 160\mathbf{j} + 80\mathbf{k}$ lb. Calculate the angles made by $\mathbf{F}$ with the positive $x$-, $y$-, and $z$-axes.

**1/5** What is the mass in both slugs and kilograms of a 3000-lb car?

**1/6** From the gravitational law calculate the weight $W$ (gravitational force with respect to the earth) of a 90-kg man in a spacecraft traveling in a circular orbit 250 km above the earth's surface. Express $W$ in both newtons and pounds.

**1/7** Determine the weight in newtons of a woman whose weight in pounds is 130. Also, find her mass in slugs and in kilograms. Determine your own weight in newtons.

**1/8** Suppose that two nondimensional quantities are exactly $A = 6.67$ and $B = 1.726$. Using the rules for significant figures as stated in this chapter, express the four quantities $(A + B)$, $(A - B)$, $(AB)$, and $(A/B)$.

**1/9** Compute the magnitude $F$ of the force which the earth exerts on the moon. Perform the calculation first in newtons and then convert your result to pounds. Refer to Table D/2 for necessary physical quantities.

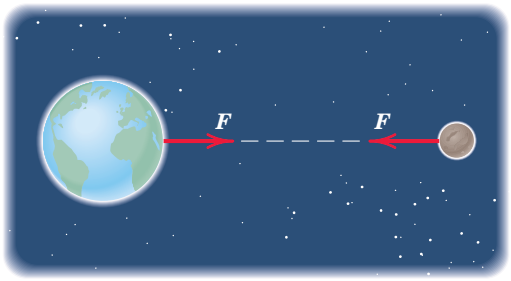


**Problem 1/9**

**1/10** The uniform steel and titanium spheres are positioned as shown. Determine the magnitude of the small gravitational force of mutual attraction if $r = 50$ mm.

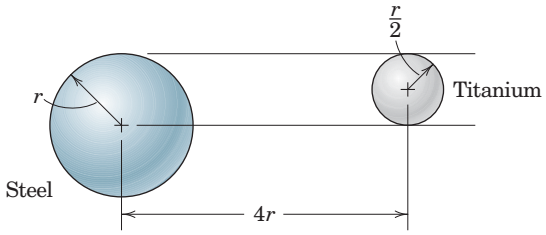


**Problem 1/10**

**1/11** Determine the percent error $n$ in replacing the sine and the tangent of an angle by the value of the angle in radians for angle values of 5°, 10°, and 20°. Explain the qualitative difference between the sine and tangent results.

**The properties of force systems must be thoroughly understood by the engineers who design structures such as these overhead cranes.**

© Media Bakery

# Force Systems

# 2

## CHAPTER OUTLINE



## 2/1 Introduction

In this and the following chapters, we study the effects of forces which act on engineering structures and mechanisms. The experience gained here will help you in the study of mechanics and in other subjects such as stress analysis, design of structures and machines, and fluid flow. This chapter lays the foundation for a basic understanding not only of statics but also of the entire subject of mechanics, and you should master this material thoroughly.

## 2/2 Force

Before dealing with a group or *system* of forces, it is necessary to examine the properties of a single force in some detail. A force has been defined in Chapter 1 as an action of one body on another. In dynamics we will see that a force is defined as an action which tends to cause acceleration of a body. A force is a *vector quantity*, because its effect depends on the direction as well as on the magnitude of the action. Thus, forces may be combined according to the parallelogram law of vector addition.

The action of the cable tension on the bracket in Fig. 2/1*a* is represented in the side view, Fig. 2/1*b*, by the force vector $\mathbf{P}$ of magnitude $P$. The effect of this action on the bracket depends on $P$, the angle $\theta$, and the location of the point of application $A$. Changing any one of these three specifications will alter the effect on the bracket, such as the force

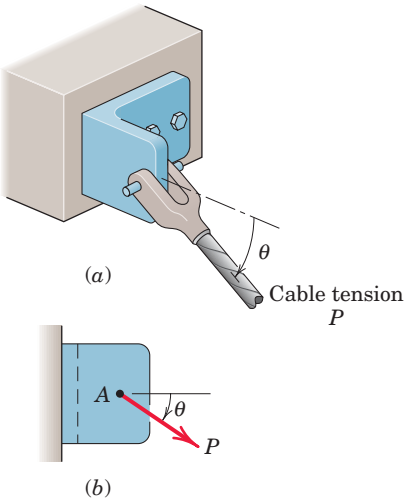


Figure 2/1

in one of the bolts which secure the bracket to the base, or the internal force and deformation in the material of the bracket at any point. Thus, the complete specification of the action of a force must include its *magnitude*, *direction*, and *point of application*, and therefore we must treat it as a fixed vector.

## External and Internal Effects

We can separate the action of a force on a body into two effects, *external* and *internal*. For the bracket of Fig. 2/1 the effects of **P** external to the bracket are the reactive forces (not shown) exerted on the bracket by the foundation and bolts because of the action of **P**. Forces external to a body can be either *applied* forces or *reactive* forces. The effects of **P** internal to the bracket are the resulting internal forces and deformations distributed throughout the material of the bracket. The relation between internal forces and internal deformations depends on the material properties of the body and is studied in strength of materials, elasticity, and plasticity.

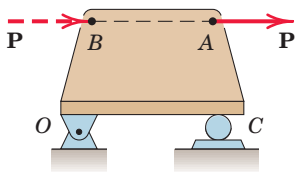


Figure 2/2

## Principle of Transmissibility

When dealing with the mechanics of a rigid body, we ignore deformations in the body and concern ourselves with only the net external effects of external forces. In such cases, experience shows us that it is not necessary to restrict the action of an applied force to a given point. For example, the force **P** acting on the rigid plate in Fig. 2/2 may be applied at $A$ or at $B$ or at any other point on its line of action, and the net external effects of **P** on the bracket will not change. The external effects are the force exerted on the plate by the bearing support at $O$ and the force exerted on the plate by the roller support at $C$.

This conclusion is summarized by the *principle of transmissibility*, which states that a force may be applied at any point on its given line of action without altering the resultant effects of the force *external* to the *rigid* body on which it acts. Thus, whenever we are interested in only the resultant external effects of a force, the force may be treated as a *sliding* vector, and we need specify only the *magnitude*, *direction*, and *line of action* of the force, and not its *point of application*. Because this book deals essentially with the mechanics of rigid bodies, we will treat almost all forces as sliding vectors for the rigid body on which they act.

© mrfotos/IStockphoto

**The forces associated with this lifting rig must be carefully identified, classified, and analyzed in order to provide a safe and effective working environment.**

## Force Classification

Forces are classified as either *contact* or *body* forces. A contact force is produced by direct physical contact; an example is the force exerted on a body by a supporting surface. On the other hand, a body force is generated by virtue of the position of a body within a force field such as a gravitational, electric, or magnetic field. An example of a body force is your weight.

Forces may be further classified as either *concentrated* or *distributed*. Every contact force is actually applied over a finite area and is therefore really a distributed force. However, when the dimensions of the area are very small compared with the other dimensions of the

body, we may consider the force to be concentrated at a point with negligible loss of accuracy. Force can be distributed over an *area*, as in the case of mechanical contact, over a *volume* when a body force such as weight is acting, or over a *line*, as in the case of the weight of a suspended cable.

The *weight* of a body is the force of gravitational attraction distributed over its volume and may be taken as a concentrated force acting through the center of gravity. The position of the center of gravity is frequently obvious if the body is symmetric. If the position is not obvious, then a separate calculation, explained in Chapter 5, will be necessary to locate the center of gravity.

We can measure a force either by comparison with other known forces, using a mechanical balance, or by the calibrated movement of an elastic element. All such comparisons or calibrations have as their basis a primary standard. The standard unit of force in SI units is the newton (N) and in the U.S. customary system is the pound (lb), as defined in Art. 1/5.

## Action and Reaction

According to Newton's third law, the *action* of a force is always accompanied by an *equal* and *opposite reaction*. It is essential to distinguish between the action and the reaction in a pair of forces. To do so, we first *isolate* the body in question and then identify the force exerted *on* that body (not the force exerted *by* the body). It is very easy to mistakenly use the wrong force of the pair unless we distinguish carefully between action and reaction.

## Concurrent Forces

Two or more forces are said to be *concurrent at a point* if their lines of action intersect at that point. The forces $\mathbf{F}_1$ and $\mathbf{F}_2$ shown in Fig. 2/3*a* have a common point of application and are concurrent at the point *A*. Thus, they can be added using the parallelogram law in their common plane to obtain their sum or *resultant* $\mathbf{R}$, as shown in Fig. 2/3*a*. The resultant lies in the same plane as $\mathbf{F}_1$ and $\mathbf{F}_2$.

Suppose the two concurrent forces lie in the same plane but are applied at two different points as in Fig. 2/3*b*. By the principle of transmissibility, we may move them along their lines of action and complete their vector sum $\mathbf{R}$ at the point of concurrency *A*, as shown in Fig. 2/3*b*. We can replace $\mathbf{F}_1$ and $\mathbf{F}_2$ with the resultant $\mathbf{R}$ without altering the external effects on the body upon which they act.

We can also use the triangle law to obtain $\mathbf{R}$, but we need to move the line of action of one of the forces, as shown in Fig. 2/3*c*. If we add the same two forces as shown in Fig. 2/3*d*, we correctly preserve the magnitude and direction of $\mathbf{R}$, but we lose the correct line of action, because $\mathbf{R}$ obtained in this way does not pass through *A*. Therefore this type of combination should be avoided.

We can express the sum of the two forces mathematically by the vector equation

$$\mathbf{R} = \mathbf{F}_1 + \mathbf{F}_2$$

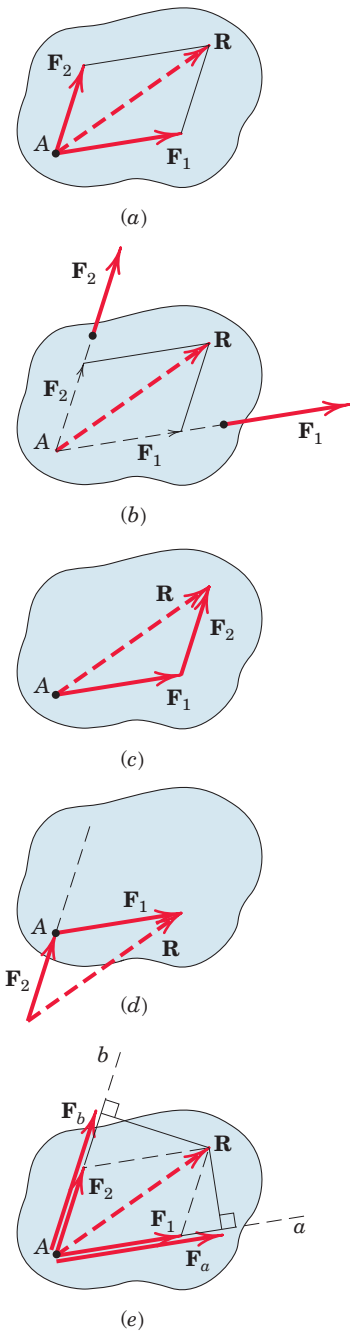


**Figure 2/3**

### Vector Components

In addition to combining forces to obtain their resultant, we often need to replace a force by its *vector components* in directions which are convenient for a given application. The vector sum of the components must equal the original vector. Thus, the force **R** in Fig. 2/3*a* may be replaced by, or *resolved* into, two vector components $\mathbf{F}_1$ and $\mathbf{F}_2$ with the specified directions by completing the parallelogram as shown to obtain the magnitudes of $\mathbf{F}_1$ and $\mathbf{F}_2$.

The relationship between a force and its vector components along given axes must not be confused with the relationship between a force and its perpendicular* projections onto the same axes. Figure 2/3*e* shows the perpendicular projections $\mathbf{F}_a$ and $\mathbf{F}_b$ of the given force **R** onto axes *a* and *b*, which are parallel to the vector components $\mathbf{F}_1$ and $\mathbf{F}_2$ of Fig. 2/3*a*. Figure 2/3*e* shows that the components of a vector are not necessarily equal to the projections of the vector onto the same axes. Furthermore, the vector sum of the projections $\mathbf{F}_a$ and $\mathbf{F}_b$ is not the vector **R**, because the parallelogram law of vector addition must be used to form the sum. The components and projections of **R** are equal only when the axes *a* and *b* are perpendicular.

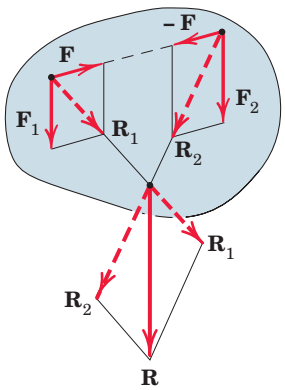


Figure 2/4

### A Special Case of Vector Addition

To obtain the resultant when the two forces $\mathbf{F}_1$ and $\mathbf{F}_2$ are parallel as in Fig. 2/4, we use a special case of addition. The two vectors are combined by first adding two equal, opposite, and collinear forces **F** and $-\mathbf{F}$ of convenient magnitude, which taken together produce no external effect on the body. Adding $\mathbf{F}_1$ and **F** to produce $\mathbf{R}_1$, and combining with the sum $\mathbf{R}_2$ of $\mathbf{F}_2$ and $-\mathbf{F}$ yield the resultant **R**, which is correct in magnitude, direction, and line of action. This procedure is also useful for graphically combining two forces which have a remote and inconvenient point of concurrency because they are almost parallel.

It is usually helpful to master the analysis of force systems in two dimensions before undertaking three-dimensional analysis. Thus the remainder of Chapter 2 is subdivided into these two categories.

## SECTION A TWO-DIMENSIONAL FORCE SYSTEMS

## 2/3 Rectangular Components

The most common two-dimensional resolution of a force vector is into rectangular components. It follows from the parallelogram rule that the vector **F** of Fig. 2/5 may be written as

$$\mathbf{F} = \mathbf{F}_x + \mathbf{F}_y \tag{2/1}$$

where $\mathbf{F}_x$ and $\mathbf{F}_y$ are *vector components* of **F** in the *x*- and *y*-directions. Each of the two vector components may be written as a scalar times the

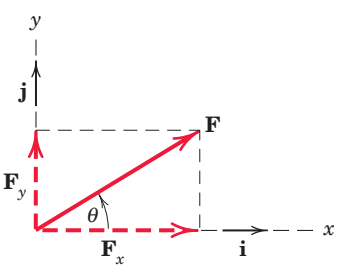


Figure 2/5

*Perpendicular projections are also called *orthogonal* projections.

appropriate unit vector. In terms of the unit vectors **i** and **j** of Fig. 2/5, $\mathbf{F}_x = F_x\mathbf{i}$ and $\mathbf{F}_y = F_y\mathbf{j}$, and thus we may write

$$\mathbf{F} = F_x\mathbf{i} + F_y\mathbf{j} \tag{2/2}$$

where the scalars $F_x$ and $F_y$ are the $x$ and $y$ *scalar components* of the vector **F**.

The scalar components can be positive or negative, depending on the quadrant into which **F** points. For the force vector of Fig. 2/5, the $x$ and $y$ scalar components are both positive and are related to the magnitude and direction of **F** by

$$\begin{aligned} F_x &= F\cos\theta \qquad & F &= \sqrt{F_x^{\,2} + F_y^{\,2}} \\ F_y &= F\sin\theta \qquad & \theta &= \tan^{-1}\frac{F_y}{F_x} \end{aligned} \tag{2/3}$$

## Conventions for Describing Vector Components

We express the magnitude of a vector with lightface italic type in print; that is, $|\mathbf{F}|$ is indicated by $F$, a quantity which is always *nonnegative*. However, the scalar components, also denoted by lightface italic type, will include sign information. See Sample Problems 2/1 and 2/3 for numerical examples which involve both positive and negative scalar components.

When both a force and its vector components appear in a diagram, it is desirable to show the vector components of the force with dashed lines, as in Fig. 2/5, and show the force with a solid line, or vice versa. With either of these conventions it will always be clear that a force and its components are being represented, and not three separate forces, as would be implied by three solid-line vectors.

Actual problems do not come with reference axes, so their assignment is a matter of arbitrary convenience, and the choice is frequently up to the student. The logical choice is usually indicated by the way in which the geometry of the problem is specified. When the principal dimensions of a body are given in the horizontal and vertical directions, for example, you would typically assign reference axes in these directions.

## Determining the Components of a Force

Dimensions are not always given in horizontal and vertical directions, angles need not be measured counterclockwise from the $x$-axis, and the origin of coordinates need not be on the line of action of a force. Therefore, it is essential that we be able to determine the correct components of a force no matter how the axes are oriented or how the angles are measured. Figure 2/6 suggests a few typical examples of vector resolution in two dimensions.

Memorization of Eqs. 2/3 is not a substitute for understanding the parallelogram law and for correctly projecting a vector onto a reference axis. A neatly drawn sketch always helps to clarify the geometry and avoid error.

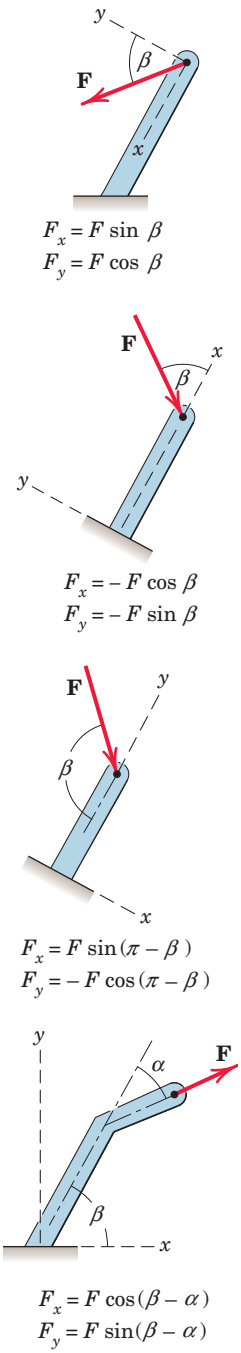


**Figure 2/6**

Rectangular components are convenient for finding the sum or resultant $\mathbf{R}$ of two forces which are concurrent. Consider two forces $\mathbf{F}_1$ and $\mathbf{F}_2$ which are originally concurrent at a point $O$. Figure 2/7 shows the line of action of $\mathbf{F}_2$ shifted from $O$ to the tip of $\mathbf{F}_1$ according to the triangle rule of Fig. 2/3. In adding the force vectors $\mathbf{F}_1$ and $\mathbf{F}_2$, we may write

$$\mathbf{R} = \mathbf{F}_1 + \mathbf{F}_2 = (F_{1_x}\mathbf{i} + F_{1_y}\mathbf{j}) + (F_{2_x}\mathbf{i} + F_{2_y}\mathbf{j})$$

or

$$R_x\mathbf{i} + R_y\mathbf{j} = (F_{1_x} + F_{2_x})\mathbf{i} + (F_{1_y} + F_{2_y})\,\mathbf{j}$$

from which we conclude that

$$\begin{aligned} R_x &= F_{1_x} + F_{2_x} = \Sigma F_x \\ R_y &= F_{1_y} + F_{2_y} = \Sigma F_y \end{aligned} \qquad \textbf{(2/4)}$$

The term $\Sigma F_x$ means "the algebraic sum of the $x$ scalar components". For the example shown in Fig. 2/7, note that the scalar component $F_{2_y}$ would be negative.

© Vince Streano/Photographer's Choice/Getty Images

**The structural elements in the foreground transmit concentrated forces to the brackets at both ends.**

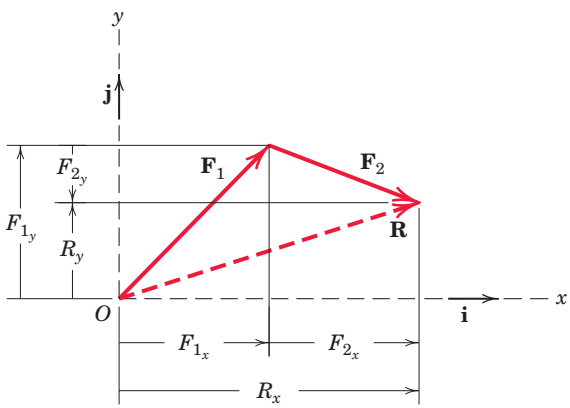


**Figure 2/7**

## SAMPLE PROBLEM 2/1

The forces $\mathbf{F}_1$, $\mathbf{F}_2$, and $\mathbf{F}_3$, all of which act on point $A$ of the bracket, are specified in three different ways. Determine the $x$ and $y$ scalar components of each of the three forces.

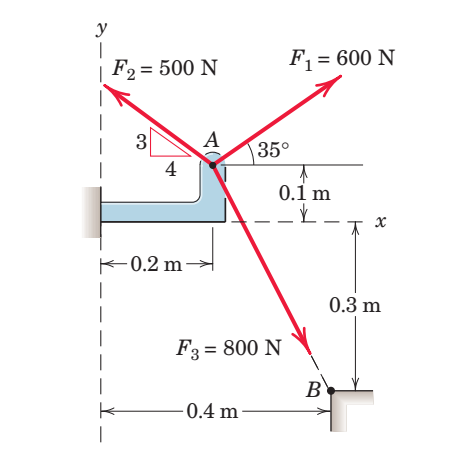


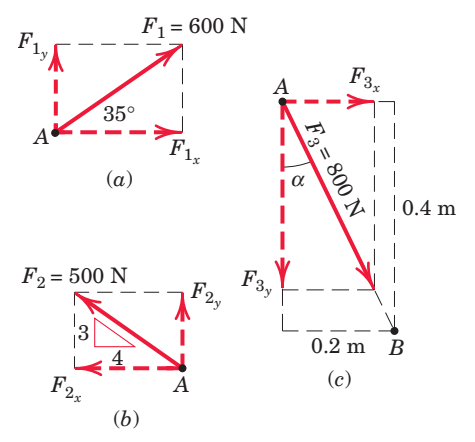


***Solution.*** The scalar components of $\mathbf{F}_1$, from Fig. $a$, are

$$F_{1_x} = 600 \cos 35° = 491 \text{ N} \qquad \textit{Ans.}$$

$$F_{1_y} = 600 \sin 35° = 344 \text{ N} \qquad \textit{Ans.}$$

The scalar components of $\mathbf{F}_2$, from Fig. $b$, are

$$F_{2_x} = -500(\tfrac{4}{5}) = -400 \text{ N} \qquad \textit{Ans.}$$

$$F_{2_y} = 500(\tfrac{3}{5}) = 300 \text{ N} \qquad \textit{Ans.}$$

Note that the angle which orients $\mathbf{F}_2$ to the $x$-axis is never calculated. The cosine and sine of the angle are available by inspection of the 3-4-5 triangle. Also note that the $x$ scalar component of $\mathbf{F}_2$ is negative by inspection.

The scalar components of $\mathbf{F}_3$ can be obtained by first computing the angle $\alpha$ of Fig. $c$.

$$\alpha = \tan^{-1}\left[\frac{0.2}{0.4}\right] = 26.6°$$

1 Then,

$$F_{3_x} = F_3 \sin \alpha = 800 \sin 26.6° = 358 \text{ N} \qquad \textit{Ans.}$$

$$F_{3_y} = -F_3 \cos \alpha = -800 \cos 26.6° = -716 \text{ N} \qquad \textit{Ans.}$$

Alternatively, the scalar components of $\mathbf{F}_3$ can be obtained by writing $\mathbf{F}_3$ as a magnitude times a unit vector $\mathbf{n}_{AB}$ in the direction of the line segment $AB$. Thus,

2

$$\mathbf{F}_3 = F_3\mathbf{n}_{AB} = F_3 \frac{\overrightarrow{AB}}{\overline{AB}} = 800\left[\frac{0.2\mathbf{i} - 0.4\mathbf{j}}{\sqrt{(0.2)^2 + (-0.4)^2}}\right]$$

$$= 800\,[0.447\mathbf{i} - 0.894\mathbf{j}]$$

$$= 358\mathbf{i} - 716\mathbf{j} \text{ N}$$

The required scalar components are then

$$F_{3_x} = 358 \text{ N} \qquad \textit{Ans.}$$

$$F_{3_y} = -716 \text{ N} \qquad \textit{Ans.}$$

which agree with our previous results.

### Helpful Hints

1 You should carefully examine the geometry of each component determination problem and not rely on the blind use of such formulas as $F_x = F \cos \theta$ and $F_y = F \sin \theta$.

2 A unit vector can be formed by dividing *any* vector, such as the geometric position vector $\overrightarrow{AB}$, by its length or magnitude. Here we use the overarrow to denote the vector which runs from $A$ to $B$ and the overbar to determine the distance between $A$ and $B$.

## SAMPLE PROBLEM 2/2

Combine the two forces **P** and **T**, which act on the fixed structure at $B$, into a single equivalent force **R**.

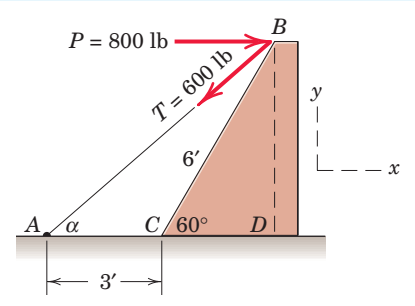


***Graphical solution.*** The parallelogram for the vector addition of forces **T** and **P** is constructed as shown in Fig. $a$. The scale used here is 1 in. = 800 lb; a scale of 1 in. = 200 lb would be more suitable for regular-size paper and would give greater accuracy. Note that the angle $\alpha$ must be determined prior to construction of the parallelogram. From the given figure

$$\tan\alpha = \frac{\overline{BD}}{\overline{AD}} = \frac{6\sin 60°}{3 + 6\cos 60°} = 0.866 \qquad \alpha = 40.9°$$

Measurement of the length $R$ and direction $\theta$ of the resultant force **R** yields the approximate results

$$R = 525 \text{ lb} \qquad \theta = 49° \qquad \textit{Ans.}$$

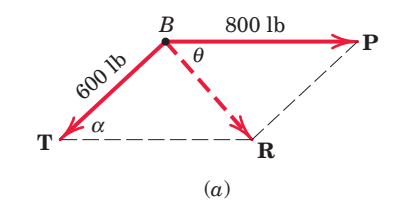

(a)

***Geometric solution.*** The triangle for the vector addition of **T** and **P** is shown in Fig. $b$. The angle $\alpha$ is calculated as above. The law of cosines gives

$$R^2 = (600)^2 + (800)^2 - 2(600)(800)\cos 40.9° = 274{,}300$$

$$R = 524 \text{ lb} \qquad \textit{Ans.}$$

From the law of sines, we may determine the angle $\theta$ which orients **R**. Thus,

$$\frac{600}{\sin\theta} = \frac{524}{\sin 40.9°} \qquad \sin\theta = 0.750 \qquad \theta = 48.6° \qquad \textit{Ans.}$$

### Helpful Hints

1. Note the repositioning of **P** to permit parallelogram addition at $B$.

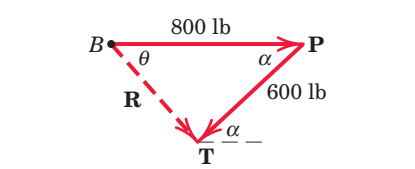

(b)

***Algebraic solution.*** By using the $x$-$y$ coordinate system on the given figure, we may write

$$R_x = \Sigma F_x = 800 - 600\cos 40.9° = 346 \text{ lb}$$

$$R_y = \Sigma F_y = -600\sin 40.9° = -393 \text{ lb}$$

The magnitude and direction of the resultant force **R** as shown in Fig. $c$ are then

$$R = \sqrt{R_x^2 + R_y^2} = \sqrt{(346)^2 + (-393)^2} = 524 \text{ lb} \qquad \textit{Ans.}$$

$$\theta = \tan^{-1}\frac{|R_y|}{|R_x|} = \tan^{-1}\frac{393}{346} = 48.6° \qquad \textit{Ans.}$$

The resultant **R** may also be written in vector notation as

$$\mathbf{R} = R_x\mathbf{i} + R_y\mathbf{j} = 346\mathbf{i} - 393\mathbf{j} \text{ lb} \qquad \textit{Ans.}$$

2. Note the repositioning of **F** so as to preserve the correct line of action of the resultant **R**.

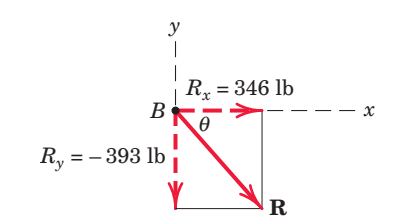

(c)

## SAMPLE PROBLEM 2/3

The 500-N force **F** is applied to the vertical pole as shown. (1) Write **F** in terms of the unit vectors **i** and **j** and identify both its vector and scalar components. (2) Determine the scalar components of the force vector **F** along the $x'$- and $y'$-axes. (3) Determine the scalar components of **F** along the $x$- and $y'$-axes.

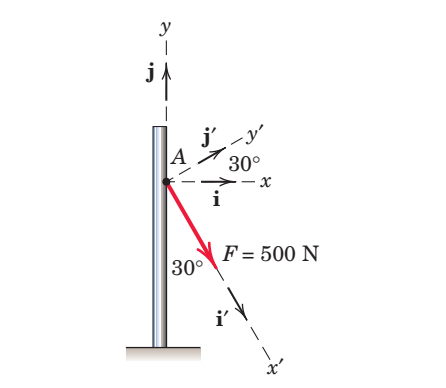


***Solution.*** ***Part (1).*** From Fig. *a* we may write **F** as

$$\mathbf{F} = (F\cos\theta)\mathbf{i} - (F\sin\theta)\mathbf{j}$$

$$= (500\cos 60°)\mathbf{i} - (500\sin 60°)\mathbf{j}$$

$$= (250\mathbf{i} - 433\mathbf{j})\text{ N} \qquad \textit{Ans.}$$

The scalar components are $F_x = 250$ N and $F_y = -433$ N. The vector components are $\mathbf{F}_x = 250\mathbf{i}$ N and $\mathbf{F}_y = -433\mathbf{j}$ N.

***Part (2).*** From Fig. *b* we may write **F** as $\mathbf{F} = 500\mathbf{i}'$ N, so that the required scalar components are

$$F_{x'} = 500\text{ N} \qquad F_{y'} = 0 \qquad \textit{Ans.}$$

***Part (3).*** The components of **F** in the $x$- and $y'$-directions are nonrectangular and are obtained by completing the parallelogram as shown in Fig. *c*. The magnitudes of the components may be calculated by the law of sines. Thus,

1 $$\frac{|F_x|}{\sin 90°} = \frac{500}{\sin 30°} \qquad |F_x| = 1000\text{ N}$$

$$\frac{|F_{y'}|}{\sin 60°} = \frac{500}{\sin 30°} \qquad |F_{y'}| = 866\text{ N}$$

The required scalar components are then

$$F_x = 1000\text{ N} \qquad F_{y'} = -866\text{ N} \qquad \textit{Ans.}$$

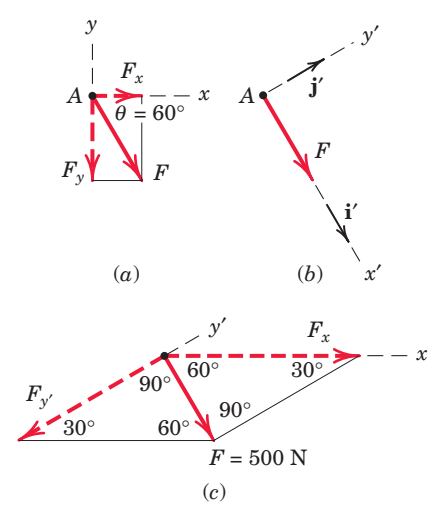


**Helpful Hint**

1 Obtain $F_x$ and $F_{y'}$ graphically and compare your results with the calculated values.

## SAMPLE PROBLEM 2/4

Forces $\mathbf{F}_1$ and $\mathbf{F}_2$ act on the bracket as shown. Determine the projection $F_b$ of their resultant **R** onto the $b$-axis.

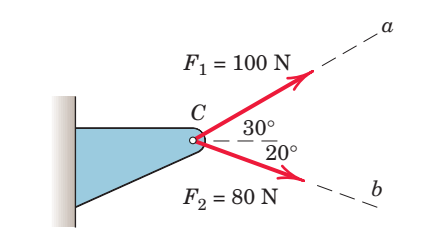


***Solution.*** The parallelogram addition of $\mathbf{F}_1$ and $\mathbf{F}_2$ is shown in the figure. Using the law of cosines gives us

$$R^2 = (80)^2 + (100)^2 - 2(80)(100)\cos 130° \qquad R = 163.4\text{ N}$$

The figure also shows the orthogonal projection $\mathbf{F}_b$ of **R** onto the $b$-axis. Its length is

$$F_b = 80 + 100\cos 50° = 144.3\text{ N} \qquad \textit{Ans.}$$

Note that the components of a vector are in general not equal to the projections of the vector onto the same axes. If the $a$-axis had been perpendicular to the $b$-axis, then the projections and components of **R** would have been equal.

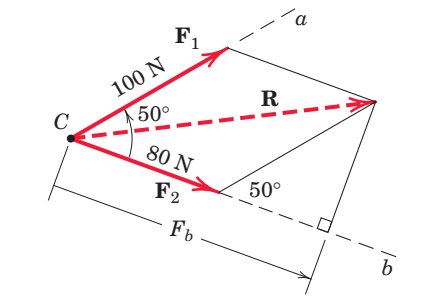

# PROBLEMS

## *Introductory Problems*

**2/1** The force **F** has a magnitude of 600 N. Express **F** as a vector in terms of the unit vectors **i** and **j**. Identify the $x$ and $y$ scalar components of **F**.

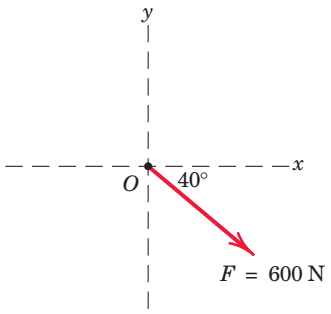


**Problem 2/1**

**2/2** The magnitude of the force **F** is 400 lb. Express **F** as a vector in terms of the unit vectors **i** and **j**. Identify both the scalar and vector components of **F**.

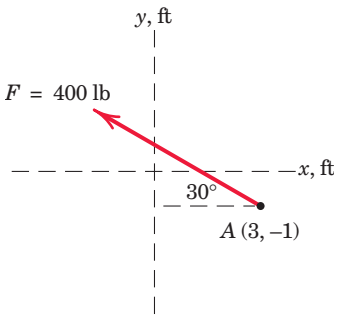


**Problem 2/2**

**2/3** The slope of the 6.5-kN force **F** is specified as shown in the figure. Express **F** as a vector in terms of the unit vectors **i** and **j**.

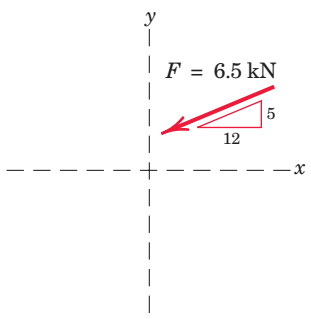


**Problem 2/3**

**2/4** The line of action of the 3000-lb force runs through the points $A$ and $B$ as shown in the figure. Determine the $x$ and $y$ scalar components of **F**.

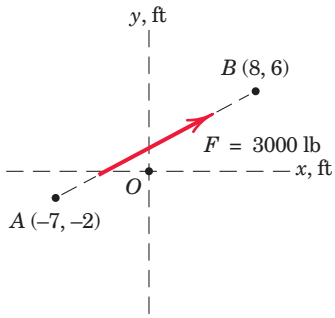


**Problem 2/4**

**2/5** The 1800-N force **F** is applied to the end of the I-beam. Express **F** as a vector using the unit vectors **i** and **j**.

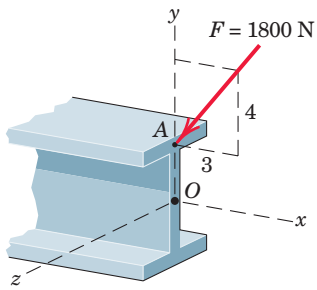


**Problem 2/5**

**2/6** The control rod $AP$ exerts a force **F** on the sector as shown. Determine both the $x$-$y$ and the $n$-$t$ components of the force.

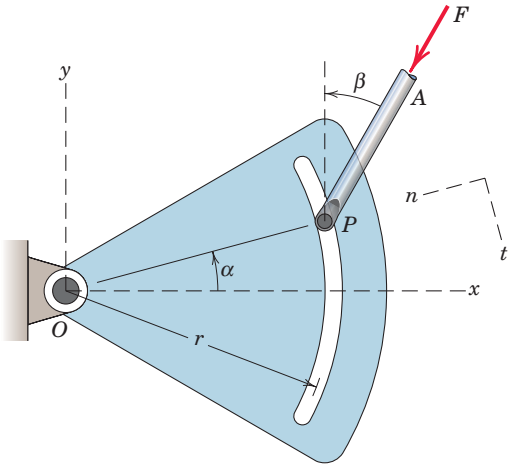


**Problem 2/6**

**2/7** The two structural members, one of which is in tension and the other in compression, exert the indicated forces on joint $O$. Determine the magnitude of the resultant $\mathbf{R}$ of the two forces and the angle $\theta$ which $\mathbf{R}$ makes with the positive $x$-axis.

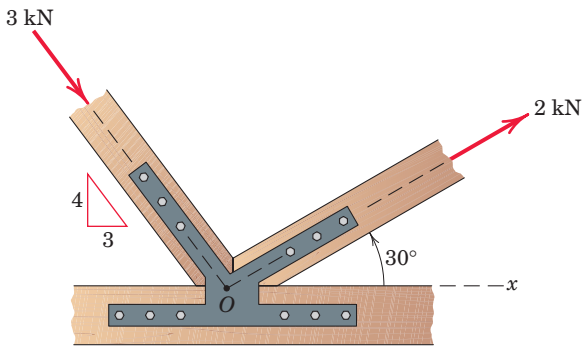


**Problem 2/7**

**2/8** The $t$-component of the force $\mathbf{F}$ is known to be 75 N. Determine the $n$-component and the magnitude of $\mathbf{F}$.

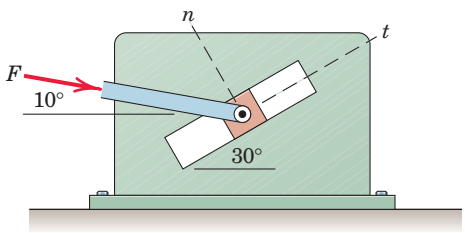


**Problem 2/8**

**2/9** Two forces are applied to the construction bracket as shown. Determine the angle $\theta$ which makes the resultant of the two forces vertical. Determine the magnitude $R$ of the resultant.

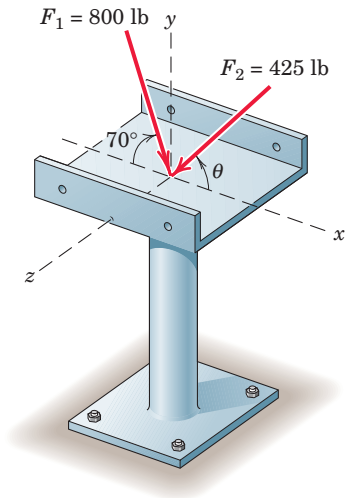


**Problem 2/9**

## *Representative Problems*

**2/10** Determine the $n$- and $t$-components of the force $\mathbf{F}$ which is exerted by the rod $AB$ on the crank $OA$. Evaluate your general expression for $F = 100$ N and (*a*) $\theta = 30°$, $\beta = 10°$ and (*b*) $\theta = 15°$, $\beta = 25°$.

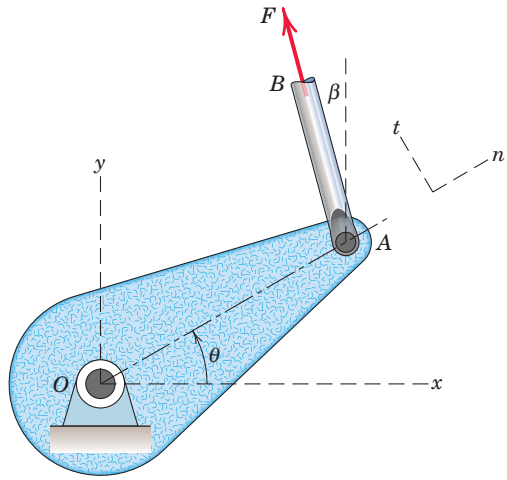


**Problem 2/10**

**2/11** The two forces shown act at point $A$ of the bent bar. Determine the resultant $\mathbf{R}$ of the two forces.

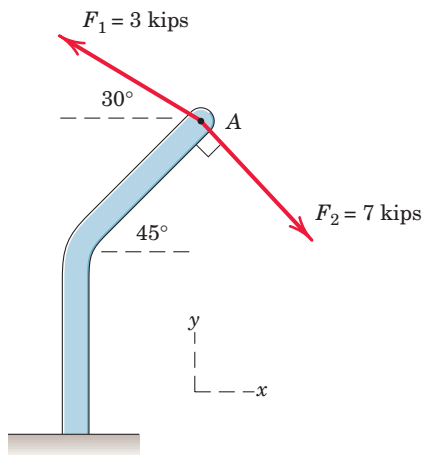


**Problem 2/11**

**2/12** A small probe $P$ is gently forced against the circular surface with a vertical force $\mathbf{F}$ as shown. Determine the $n$- and $t$-components of this force as functions of the horizontal position $s$.

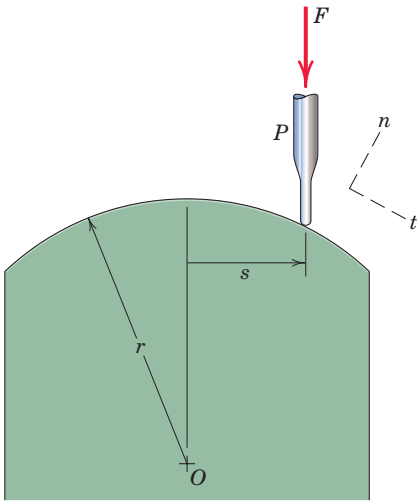


**Problem 2/12**

**2/13** The guy cables $AB$ and $AC$ are attached to the top of the transmission tower. The tension in cable $AB$ is 8 kN. Determine the required tension $T$ in cable $AC$ such that the net effect of the two cable tensions is a downward force at point $A$. Determine the magnitude $R$ of this downward force.

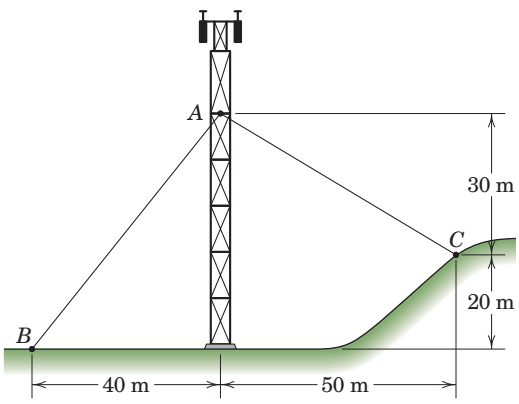


**Problem 2/13**

**2/14** If the equal tensions $T$ in the pulley cable are 400 N, express in vector notation the force $\mathbf{R}$ exerted on the pulley by the two tensions. Determine the magnitude of $\mathbf{R}$.

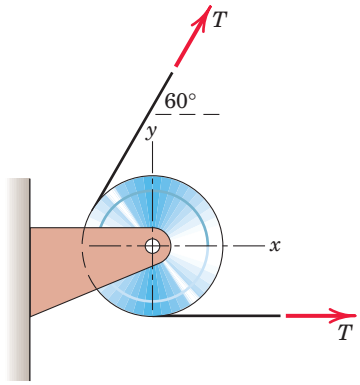


**Problem 2/14**

**2/15** To satisfy design limitations it is necessary to determine the effect of the 2-kN tension in the cable on the shear, tension, and bending of the fixed I-beam. For this purpose replace this force by its equivalent of two forces at $A$, $F_t$ parallel and $F_n$ perpendicular to the beam. Determine $F_t$ and $F_n$.

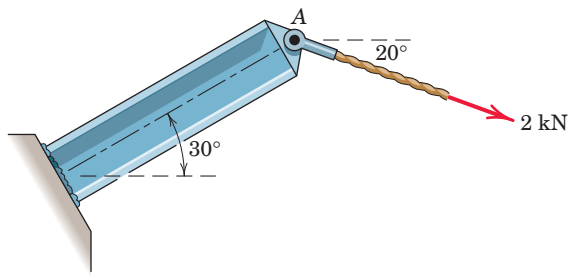


**Problem 2/15**

**2/16** Determine the $x$- and $y$-components of the tension $T$ which is applied to point $A$ of the bar $OA$. Neglect the effects of the small pulley at $B$. Assume that $r$ and $\theta$ are known.

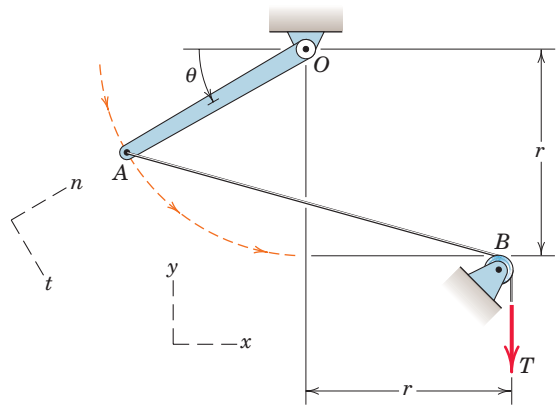


**Problem 2/16**

**2/17** Refer to the mechanism of the previous problem. Develop general expressions for the $n$- and $t$-components of the tension $T$ applied to point $A$. Then evaluate your expressions for $T = 100$ N and $\theta = 35°$.

**2/18** The ratio of the lift force $L$ to the drag force $D$ for the simple airfoil is $L/D = 10$. If the lift force on a short section of the airfoil is 50 lb, compute the magnitude of the resultant force **R** and the angle $\theta$ which it makes with the horizontal.

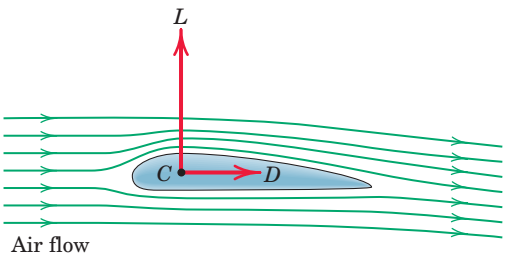


**Problem 2/18**

**2/19** Determine the resultant **R** of the two forces applied to the bracket. Write **R** in terms of unit vectors along the $x$- and $y$-axes shown.

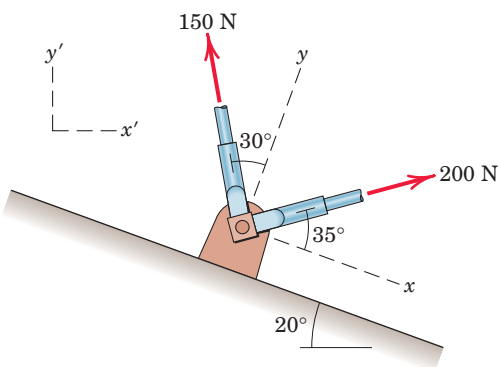


**Problem 2/19**

**2/20** Determine the scalar components $R_a$ and $R_b$ of the force **R** along the nonrectangular axes $a$ and $b$. Also determine the orthogonal projection $P_a$ of **R** onto axis $a$.

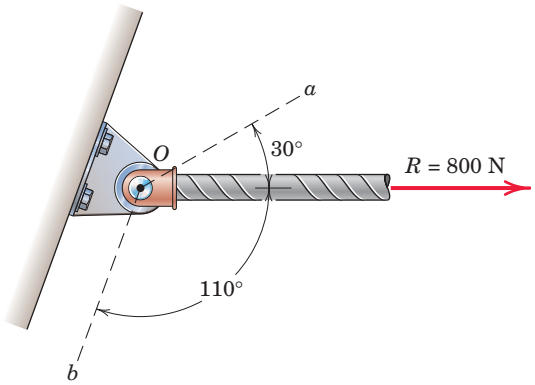


**Problem 2/20**

**2/21** Determine the components of the 800-lb force **F** along the oblique axes $a$ and $b$. Also, determine the projections of **F** onto the $a$- and $b$-axes.

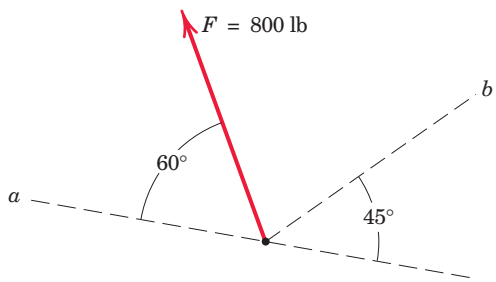


**Problem 2/21**

**2/22** Determine the components $F_a$ and $F_b$ of the 4-kN force along the oblique axes $a$ and $b$. Determine the projections $P_a$ and $P_b$ of **F** onto the $a$- and $b$-axes.

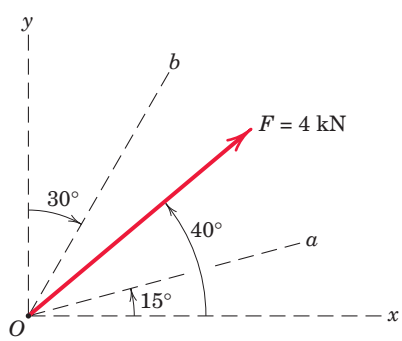


**Problem 2/22**

**2/23** Determine the resultant **R** of the two forces shown by (*a*) applying the parallelogram rule for vector addition and (*b*) summing scalar components.

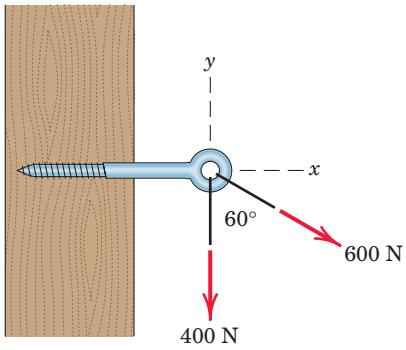


**Problem 2/23**

**2/24** It is desired to remove the spike from the timber by applying force along its horizontal axis. An obstruction *A* prevents direct access, so that two forces, one 400 lb and the other **P**, are applied by cables as shown. Compute the magnitude of **P** necessary to ensure a resultant **T** directed along the spike. Also find *T*.

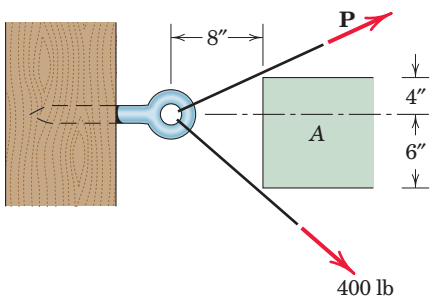


**Problem 2/24**

**2/25** At what angle $\theta$ must the 800-lb force be applied in order that the resultant **R** of the two forces have a magnitude of 2000 lb? For this condition, determine the angle $\beta$ between **R** and the vertical.

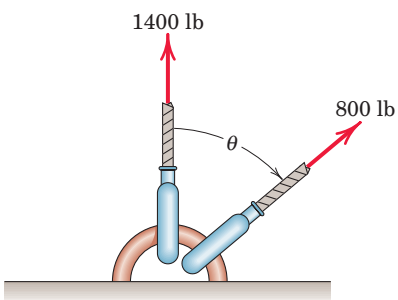


**Problem 2/25**

**2/26** The cable *AB* prevents bar *OA* from rotating clockwise about the pivot *O*. If the cable tension is 750 N, determine the *n*- and *t*-components of this force acting on point *A* of the bar.

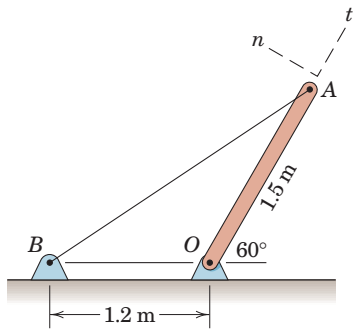


**Problem 2/26**

**2/27** At what angle $\theta$ must the 400-lb force be applied in order that the resultant **R** of the two forces have a magnitude of 1000 lb? For this condition what will be the angle $\beta$ between **R** and the horizontal?

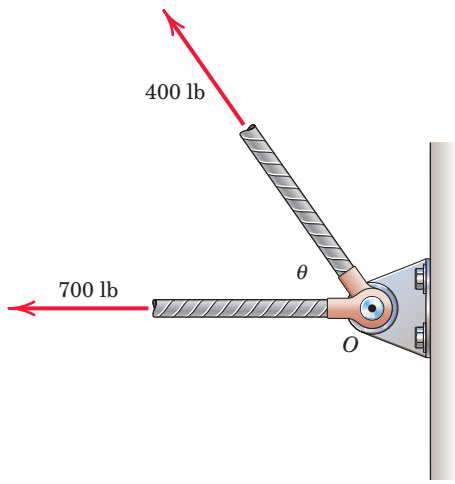


**Problem 2/27**

**2/28** In the design of the robot to insert the small cylindrical part into a close-fitting circular hole, the robot arm must exert a 90-N force $P$ on the part parallel to the axis of the hole as shown. Determine the components of the force which the part exerts *on* the robot along axes ($a$) parallel and perpendicular to the arm $AB$, and ($b$) parallel and perpendicular to the arm $BC$.

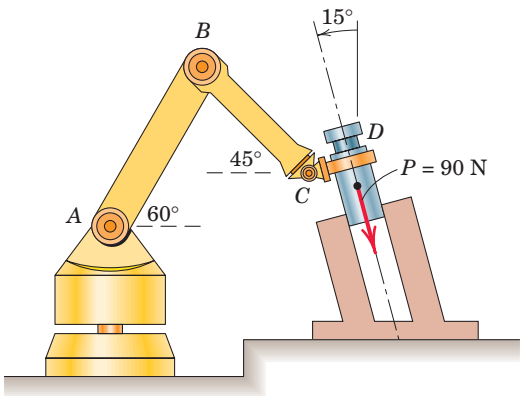


**Problem 2/28**

**▶2/29** The unstretched length of the spring is $r$. When pin $P$ is in an arbitrary position $\theta$, determine the $x$- and $y$-components of the force which the spring exerts on the pin. Evaluate your general expressions for $r = 400$ mm, $k = 1.4$ kN/m, and $\theta = 40°$. (*Note*: The force in a spring is given by $F = k\delta$, where $\delta$ is the extension from the unstretched length.)

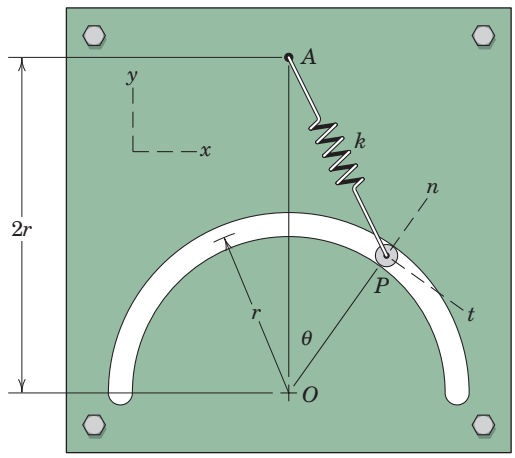


**Problem 2/29**

**▶2/30** Refer to the figure and statement of Prob. 2/29. When pin $P$ is in the position $\theta = 20°$, determine the $n$- and $t$-components of the force $F$ which the spring of modulus $k = 1.4$ kN/m exerts on the pin. The distance $r = 400$ mm.

## 2/4 Moment

In addition to the tendency to move a body in the direction of its application, a force can also tend to rotate a body about an axis. The axis may be any line which neither intersects nor is parallel to the line of action of the force. This rotational tendency is known as the *moment* **M** of the force. Moment is also referred to as *torque*.

As a familiar example of the concept of moment, consider the pipe wrench of Fig. 2/8*a*. One effect of the force applied perpendicular to the handle of the wrench is the tendency to rotate the pipe about its vertical axis. The magnitude of this tendency depends on both the magnitude $F$ of the force and the effective length $d$ of the wrench handle. Common experience shows that a pull which is not perpendicular to the wrench handle is less effective than the right-angle pull shown.

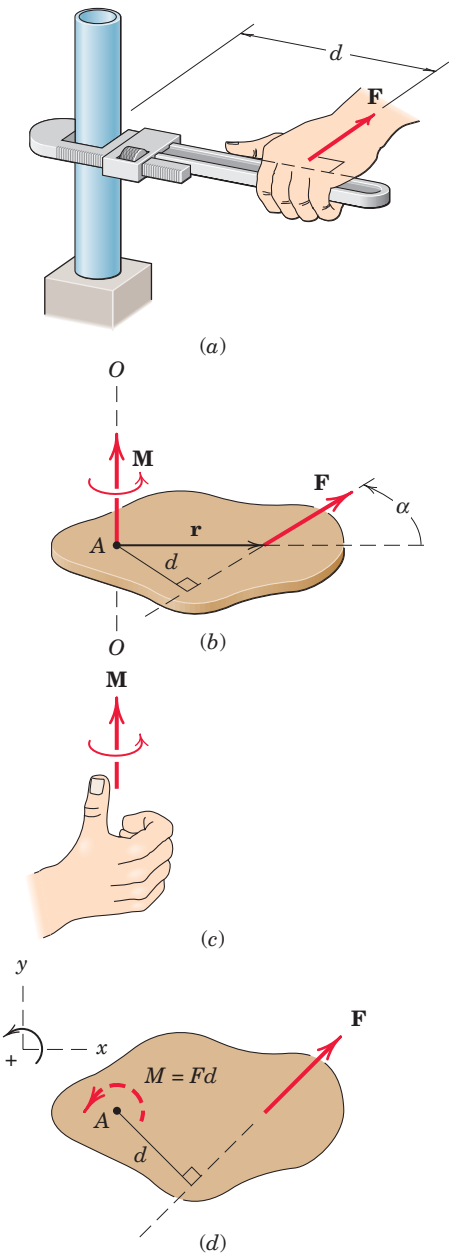


**Figure 2/8**

### Moment about a Point

Figure 2/8*b* shows a two-dimensional body acted on by a force **F** in its plane. The magnitude of the moment or tendency of the force to rotate the body about the axis *O-O* perpendicular to the plane of the body is proportional both to the magnitude of the force and to the *moment arm* $d$, which is the perpendicular distance from the axis to the line of action of the force. Therefore, the magnitude of the moment is defined as

$$M = Fd \tag{2/5}$$

The moment is a vector **M** perpendicular to the plane of the body. The sense of **M** depends on the direction in which **F** tends to rotate the body. The right-hand rule, Fig. 2/8*c*, is used to identify this sense. We represent the moment of **F** about *O-O* as a vector pointing in the direction of the thumb, with the fingers curled in the direction of the rotational tendency.

The moment **M** obeys all the rules of vector combination and may be considered a sliding vector with a line of action coinciding with the moment axis. The basic units of moment in SI units are newton-meters (N·m), and in the U.S. customary system are pound-feet (lb-ft).

When dealing with forces which all act in a given plane, we customarily speak of the moment *about a point*. By this we mean the moment with respect to an axis normal to the plane and passing through the point. Thus, the moment of force **F** about point $A$ in Fig. 2/8*d* has the magnitude $M = Fd$ and is counterclockwise.

Moment directions may be accounted for by using a stated sign convention, such as a plus sign (+) for counterclockwise moments and a minus sign (−) for clockwise moments, or vice versa. Sign consistency within a given problem is essential. For the sign convention of Fig. 2/8*d*, the moment of **F** about point $A$ (or about the $z$-axis passing through point $A$) is positive. The curved arrow of the figure is a convenient way to represent moments in two-dimensional analysis.

## The Cross Product

In some two-dimensional and many of the three-dimensional problems to follow, it is convenient to use a vector approach for moment calculations. The moment of **F** about point *A* of Fig. 2/8*b* may be represented by the cross-product expression

$$\mathbf{M} = \mathbf{r} \times \mathbf{F} \tag{2/6}$$

where **r** is a position vector which runs from the moment reference point *A* to *any* point on the line of action of **F**. The magnitude of this expression is given by*

$$M = Fr \sin \alpha = Fd \tag{2/7}$$

which agrees with the moment magnitude as given by Eq. 2/5. Note that the moment arm $d = r \sin \alpha$ does not depend on the particular point on the line of action of **F** to which the vector **r** is directed. We establish the direction and sense of **M** by applying the right-hand rule to the sequence $\mathbf{r} \times \mathbf{F}$. If the fingers of the right hand are curled in the direction of rotation from the positive sense of **r** to the positive sense of **F**, then the thumb points in the positive sense of **M**.

We must maintain the sequence $\mathbf{r} \times \mathbf{F}$, because the sequence $\mathbf{F} \times \mathbf{r}$ would produce a vector with a sense opposite to that of the correct moment. As was the case with the scalar approach, the moment **M** may be thought of as the moment about point *A* or as the moment about the line *O-O* which passes through point *A* and is perpendicular to the plane containing the vectors **r** and **F**. When we evaluate the moment of a force about a given point, the choice between using the vector cross product or the scalar expression depends on how the geometry of the problem is specified. If we know or can easily determine the perpendicular distance between the line of action of the force and the moment center, then the scalar approach is generally simpler. If, however, **F** and **r** are not perpendicular and are easily expressible in vector notation, then the cross-product expression is often preferable.

In Section B of this chapter, we will see how the vector formulation of the moment of a force is especially useful for determining the moment of a force about a point in three-dimensional situations.

## Varignon's Theorem

One of the most useful principles of mechanics is *Varignon's theorem*, which states that the moment of a force about any point is equal to the sum of the moments of the components of the force about the same point.

*See item 7 in Art. C/7 of Appendix C for additional information concerning the cross product.

To prove this theorem, consider the force **R** acting in the plane of the body shown in Fig. 2/9*a*. The forces **P** and **Q** represent any two nonrectangular components of **R**. The moment of **R** about point *O* is

$$\mathbf{M}_O = \mathbf{r} \times \mathbf{R}$$

Because $\mathbf{R} = \mathbf{P} + \mathbf{Q}$, we may write

$$\mathbf{r} \times \mathbf{R} = \mathbf{r} \times (\mathbf{P} + \mathbf{Q})$$

Using the distributive law for cross products, we have

$$\mathbf{M}_O = \mathbf{r} \times \mathbf{R} = \mathbf{r} \times \mathbf{P} + \mathbf{r} \times \mathbf{Q} \qquad \textbf{(2/8)}$$

which says that the moment of **R** about *O* equals the sum of the moments about *O* of its components **P** and **Q**. This proves the theorem.

Varignon's theorem need not be restricted to the case of two components, but it applies equally well to three or more. Thus we could have used any number of concurrent components of **R** in the foregoing proof.*

Figure 2/9*b* illustrates the usefulness of Varignon's theorem. The moment of **R** about point *O* is $Rd$. However, if $d$ is more difficult to determine than $p$ and $q$, we can resolve **R** into the components **P** and **Q**, and compute the moment as

$$M_O = Rd = -pP + qQ$$

where we take the clockwise moment sense to be positive.

Sample Problem 2/5 shows how Varignon's theorem can help us to calculate moments.

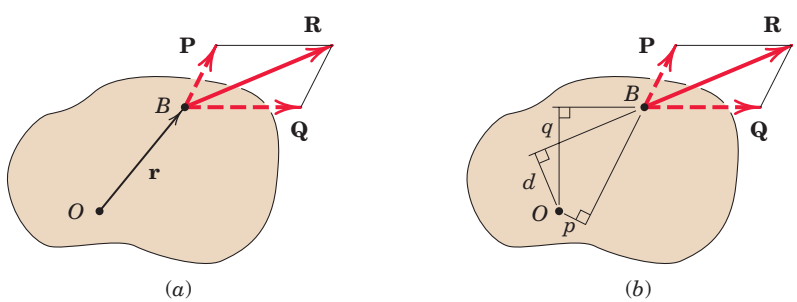


**Figure 2/9**

*As originally stated, Varignon's theorem was limited to the case of two concurrent components of a given force. See *The Science of Mechanics*, by Ernst Mach, originally published in 1883.

## SAMPLE PROBLEM 2/5

Calculate the magnitude of the moment about the base point $O$ of the 600-N force in five different ways.

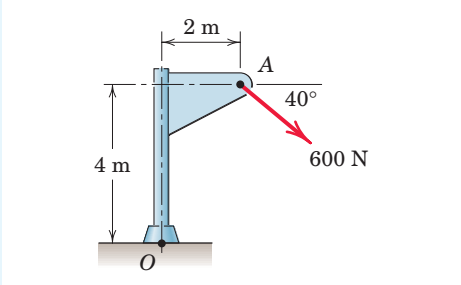


**Solution.** ***(I)*** The moment arm to the 600-N force is

$$d = 4 \cos 40° + 2 \sin 40° = 4.35 \text{ m}$$

1 By $M = Fd$ the moment is clockwise and has the magnitude

$$M_O = 600(4.35) = 2610 \text{ N}\cdot\text{m} \qquad \textit{Ans.}$$

***(II)*** Replace the force by its rectangular components at $A$,

$$F_1 = 600 \cos 40° = 460 \text{ N}, \qquad F_2 = 600 \sin 40° = 386 \text{ N}$$

By Varignon's theorem, the moment becomes

2 $$M_O = 460(4) + 386(2) = 2610 \text{ N}\cdot\text{m} \qquad \textit{Ans.}$$

***(III)*** By the principle of transmissibility, move the 600-N force along its line of action to point $B$, which eliminates the moment of the component $F_2$. The moment arm of $F_1$ becomes

$$d_1 = 4 + 2 \tan 40° = 5.68 \text{ m}$$

and the moment is

$$M_O = 460(5.68) = 2610 \text{ N}\cdot\text{m} \qquad \textit{Ans.}$$

3 ***(IV)*** Moving the force to point $C$ eliminates the moment of the component $F_1$. The moment arm of $F_2$ becomes

$$d_2 = 2 + 4 \cot 40° = 6.77 \text{ m}$$

and the moment is

$$M_O = 386(6.77) = 2610 \text{ N}\cdot\text{m} \qquad \textit{Ans.}$$

***(V)*** By the vector expression for a moment, and by using the coordinate system indicated on the figure together with the procedures for evaluating cross products, we have

4 $$\mathbf{M}_O = \mathbf{r} \times \mathbf{F} = (2\mathbf{i} + 4\mathbf{j}) \times 600(\mathbf{i} \cos 40° - \mathbf{j} \sin 40°)$$
$$= -2610\mathbf{k} \text{ N}\cdot\text{m}$$

The minus sign indicates that the vector is in the negative $z$-direction. The magnitude of the vector expression is

$$M_O = 2610 \text{ N}\cdot\text{m} \qquad \textit{Ans.}$$

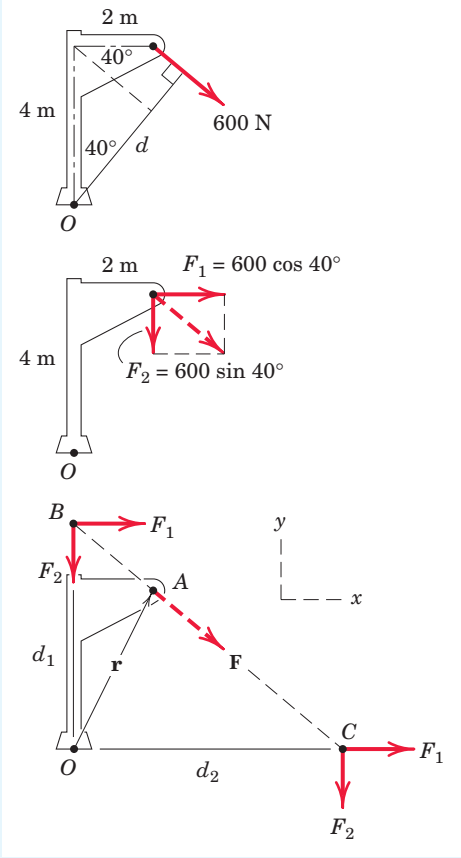


### Helpful Hints

1. The required geometry here and in similar problems should not cause difficulty if the sketch is carefully drawn.
2. This procedure is frequently the shortest approach.
3. The fact that points $B$ and $C$ are not on the body proper should not cause concern, as the mathematical calculation of the moment of a force does not require that the force be on the body.
4. Alternative choices for the position vector $\mathbf{r}$ are $\mathbf{r} = d_1\mathbf{j} = 5.68\mathbf{j}$ m and $\mathbf{r} = d_2\mathbf{i} = 6.77\mathbf{i}$ m.

## SAMPLE PROBLEM 2/6

The trap door $OA$ is raised by the cable $AB$, which passes over the small frictionless guide pulleys at $B$. The tension everywhere in the cable is $T$, and this tension applied at $A$ causes a moment $M_O$ about the hinge at $O$. Plot the quantity $M_O/T$ as a function of the door elevation angle $\theta$ over the range $0 \le \theta \le 90°$ and note minimum and maximum values. What is the physical significance of this ratio?

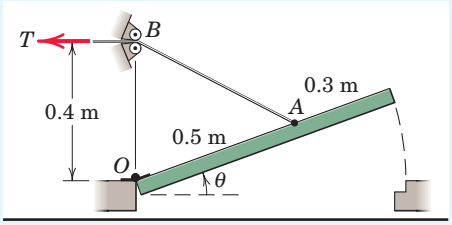


**Solution.** We begin by constructing a figure which shows the tension force $\mathbf{T}$ acting directly on the door, which is shown in an arbitrary angular position $\theta$. It should be clear that the direction of $\mathbf{T}$ will vary as $\theta$ varies. In order to deal with this variation, we write a unit vector $\mathbf{n}_{AB}$ which "aims" $\mathbf{T}$:

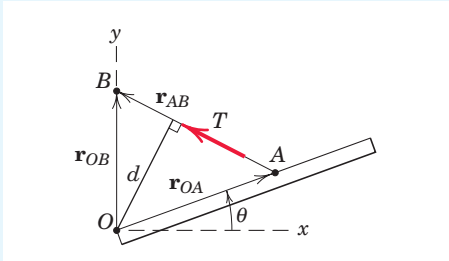


1 $$\mathbf{n}_{AB} = \frac{\mathbf{r}_{AB}}{r_{AB}} = \frac{\mathbf{r}_{OB} - \mathbf{r}_{OA}}{r_{AB}}$$

Using the $x$-$y$ coordinates of our figure, we can write

2 $$\mathbf{r}_{OB} = 0.4\mathbf{j} \text{ m and } \mathbf{r}_{OA} = 0.5(\cos\theta\mathbf{i} + \sin\theta\mathbf{j}) \text{ m}$$

So

$$\mathbf{r}_{AB} = \mathbf{r}_{OB} - \mathbf{r}_{OA} = 0.4\mathbf{j} - (0.5)(\cos\theta\mathbf{i} + \sin\theta\mathbf{j})$$
$$= -0.5\cos\theta\mathbf{i} + (0.4 - 0.5\sin\theta)\mathbf{j} \text{ m}$$

and

$$r_{AB} = \sqrt{(0.5\cos\theta)^2 + (0.4 - 0.5\sin\theta)^2}$$
$$= \sqrt{0.41 - 0.4\sin\theta} \text{ m}$$

The desired unit vector is

$$\mathbf{n}_{AB} = \frac{\mathbf{r}_{AB}}{r_{AB}} = \frac{-0.5\cos\theta\mathbf{i} + (0.4 - 0.5\sin\theta)\mathbf{j}}{\sqrt{0.41 - 0.4\sin\theta}}$$

Our tension vector can now be written as

$$\mathbf{T} = T\mathbf{n}_{AB} = T\left[\frac{-0.5\cos\theta\mathbf{i} + (0.4 - 0.5\sin\theta)\mathbf{j}}{\sqrt{0.41 - 0.4\sin\theta}}\right]$$

3 The moment of $\mathbf{T}$ about point $O$, as a vector, is $\mathbf{M}_O = \mathbf{r}_{OB} \times \mathbf{T}$, where $\mathbf{r}_{OB} = 0.4\mathbf{j}$ m, or

$$\mathbf{M}_O = 0.4\mathbf{j} \times T\left[\frac{-0.5\cos\theta\mathbf{i} + (0.4 - 0.5\sin\theta)\mathbf{j}}{\sqrt{0.41 - 0.4\sin\theta}}\right]$$
$$= \frac{0.2T\cos\theta}{\sqrt{0.41 - 0.4\sin\theta}}\mathbf{k}$$

The magnitude of $\mathbf{M}_O$ is

$$M_O = \frac{0.2T\cos\theta}{\sqrt{0.41 - 0.4\sin\theta}}$$

and the requested ratio is

$$\frac{M_O}{T} = \frac{0.2\cos\theta}{\sqrt{0.41 - 0.4\sin\theta}} \qquad \textit{Ans.}$$

which is plotted in the accompanying graph. The expression $M_O/T$ is the moment arm $d$ (in meters) which runs from $O$ to the line of action of $\mathbf{T}$. It has a maximum value of 0.4 m at $\theta = 53.1°$ (at which point $\mathbf{T}$ is horizontal) and a minimum value of 0 at $\theta = 90°$ (at which point $\mathbf{T}$ is vertical). The expression is valid even if $T$ varies.

This sample problem treats moments in two-dimensional force systems, and it also points out the advantages of carrying out a solution for an arbitrary position, so that behavior over a range of positions can be examined.

### Helpful Hints

1 Recall that any unit vector can be written as a vector divided by its magnitude. In this case the vector in the numerator is a position vector.

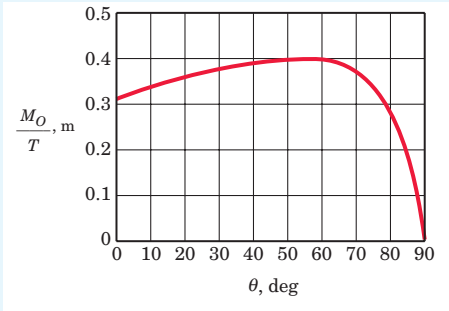


2 Recall that any vector may be written as a magnitude times an "aiming" unit vector.

3 In the expression $\mathbf{M} = \mathbf{r} \times \mathbf{F}$, the position vector $\mathbf{r}$ runs *from* the moment center *to* any point on the line of action of $\mathbf{F}$. Here, $\mathbf{r}_{OB}$ is more convenient than $\mathbf{r}_{OA}$.

# PROBLEMS

## *Introductory Problems*

**2/31** The 4-kN force **F** is applied at point $A$. Compute the moment of **F** about point $O$, expressing it both as a scalar and as a vector quantity. Determine the coordinates of the points on the $x$- and $y$-axes about which the moment of **F** is zero.

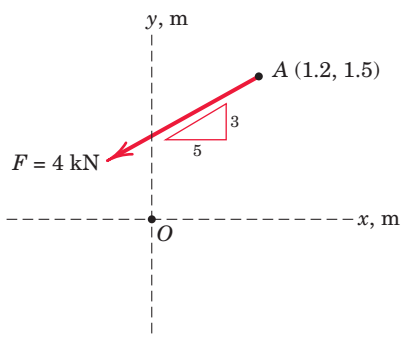


**Problem 2/31**

**2/32** The rectangular plate is made up of 1-ft squares as shown. A 30-lb force is applied at point $A$ in the direction shown. Calculate the moment $M_B$ of the force about point $B$ by at least two different methods.

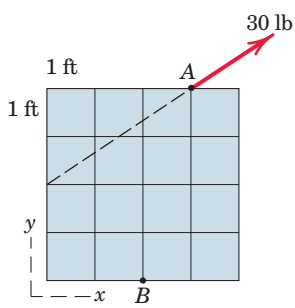


**Problem 2/32**

**2/33** The throttle-control sector pivots freely at $O$. If an internal torsional spring exerts a return moment $M = 1.8\ \text{N}\cdot\text{m}$ on the sector when in the position shown, for design purposes determine the necessary throttle-cable tension $T$ so that the net moment about $O$ is zero. Note that when $T$ is zero, the sector rests against the idle-control adjustment screw at $R$.

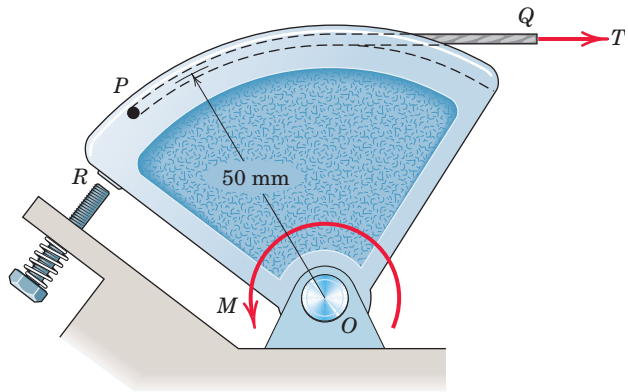


**Problem 2/33**

**2/34** The force of magnitude $F$ acts along the edge of the triangular plate. Determine the moment of **F** about point $O$.

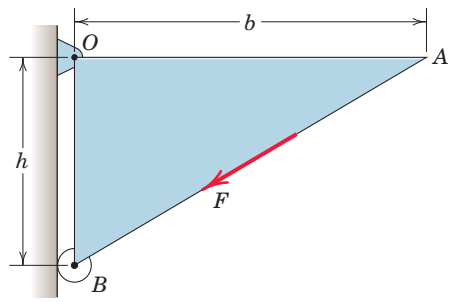


**Problem 2/34**

**2/35** Calculate the moment of the 250-N force on the handle of the monkey wrench about the center of the bolt.

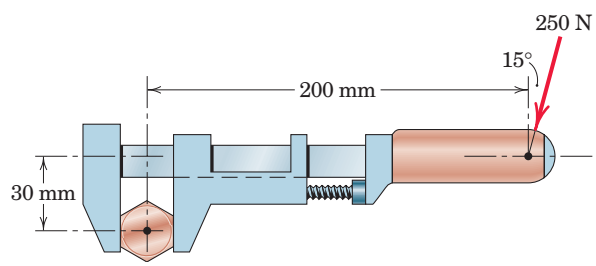


**Problem 2/35**

**2/36** The tension in cable $AB$ is 100 N. Determine the moment about $O$ of this tension as applied to point $A$ of the T-shaped bar. The dimension $b$ is 600 mm.

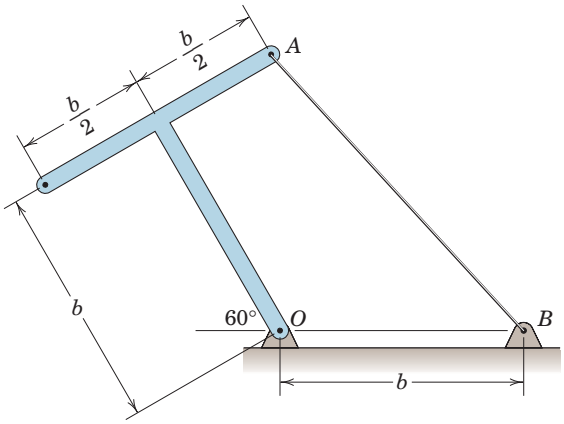


**Problem 2/36**

**2/37** A prybar is used to remove a nail as shown. Determine the moment of the 60-lb force about the point $O$ of contact between the prybar and the small support block.

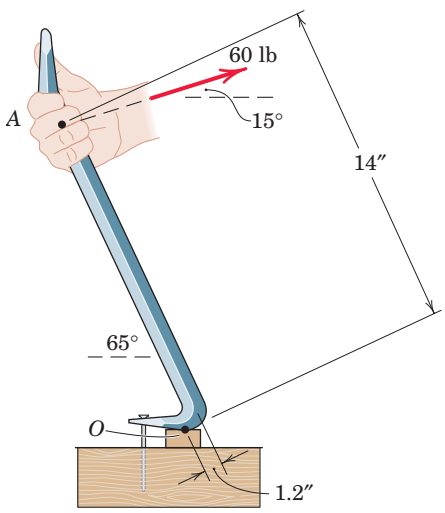


**Problem 2/37**

**2/38** A force **F** of magnitude 60 N is applied to the gear. Determine the moment of **F** about point $O$.

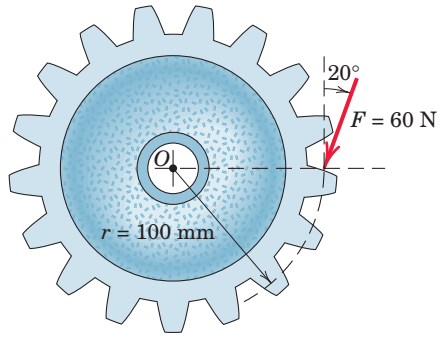


**Problem 2/38**

## *Representative Problems*

**2/39** The slender quarter-circular member of mass $m$ is built-in at its support $O$. Determine the moment of its weight about point $O$. Use Table D/3 as necessary to determine the location of the mass center of the body.

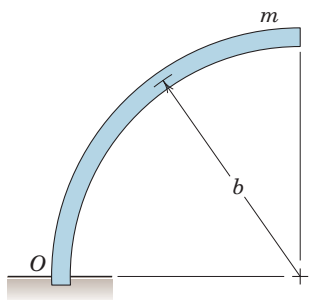


**Problem 2/39**

**2/40** The 30-N force **P** is applied perpendicular to the portion $BC$ of the bent bar. Determine the moment of **P** about point $B$ and about point $A$.

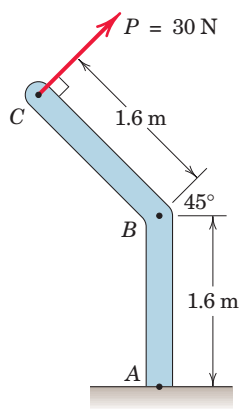


**Problem 2/40**

**2/41** Compute the moment of the 0.4-lb force about the pivot $O$ of the wall-switch toggle.

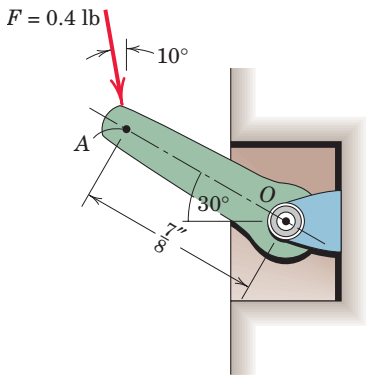


**Problem 2/41**

**2/42** The cable $AB$ carries a tension of 400 N. Determine the moment about $O$ of this tension as applied to point $A$ of the slender bar.

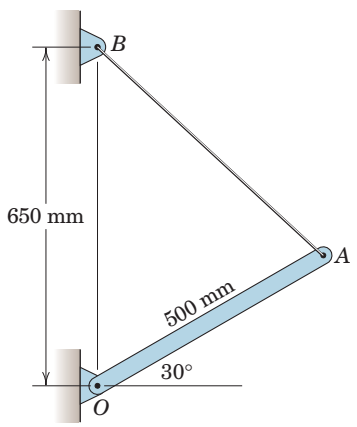


**Problem 2/42**

**2/43** As a trailer is towed in the forward direction, the force $F = 120$ lb is applied as shown to the ball of the trailer hitch. Determine the moment of this force about point $O$.

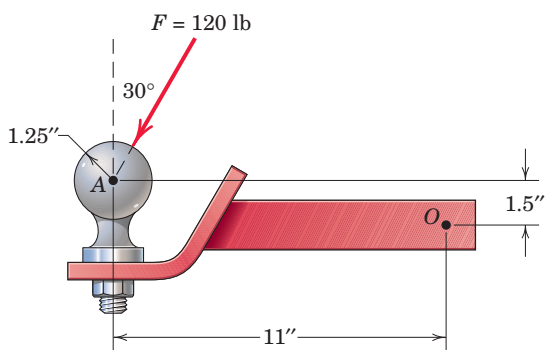


**Problem 2/43**

**2/44** Determine the moments of the tension $T$ about point $P$ and about point $O$.

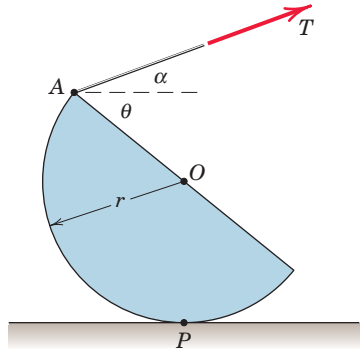


**Problem 2/44**

**2/45** The lower lumbar region $A$ of the spine is the part of the spinal column most susceptible to abuse while resisting excessive bending caused by the moment about $A$ of a force $F$. For given values of $F$, $b$, and $h$, determine the angle $\theta$ which causes the most severe bending strain.

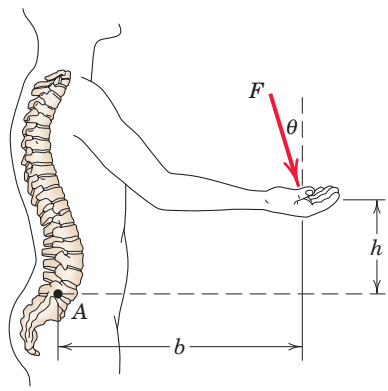


**Problem 2/45**

**2/46** Determine the combined moment about $O$ due to the weight of the mailbox and the cross member $AB$. The mailbox weighs 4 lb and the uniform cross member weighs 10 lb. Both weights act at the geometric centers of the respective items.

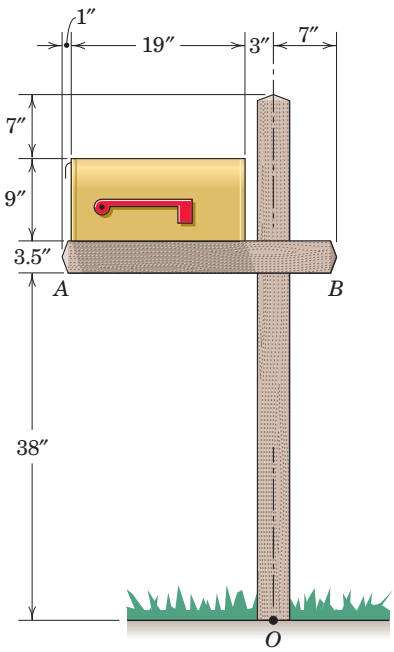


**Problem 2/46**

**2/47** A portion of a mechanical coin sorter works as follows: Pennies and dimes roll down the 20° incline, the last triangular portion of which pivots freely about a horizontal axis through $O$. Dimes are light enough (2.28 grams each) so that the triangular portion remains stationary, and the dimes roll into the right collection column. Pennies, on the other hand, are heavy enough (3.06 grams each) so that the triangular portion pivots clockwise, and the pennies roll into the left collection column. Determine the moment about $O$ of the weight of the penny in terms of the slant distance $s$ in millimeters.

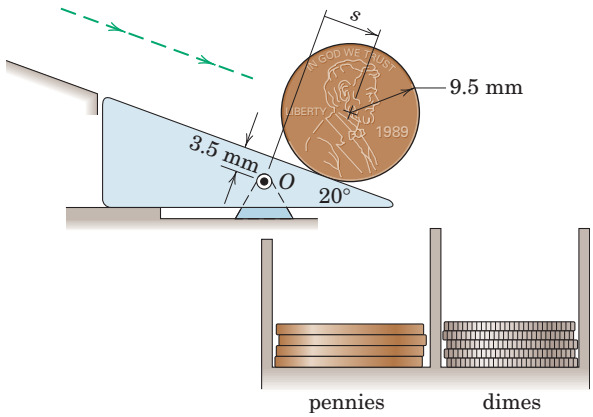


**Problem 2/47**

**2/48** The crank of Prob. 2/10 is repeated here. If $\overline{OA} = 50$ mm, $\theta = 25°$, and $\beta = 55°$, determine the moment of the force $\mathbf{F}$ of magnitude $F = 20$ N about point $O$.

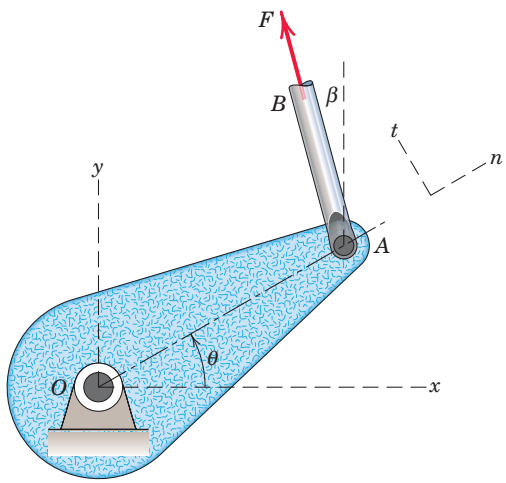


**Problem 2/48**

**2/49** Elements of the lower arm are shown in the figure. The weight of the forearm is 5 lb with mass center at $G$. Determine the combined moment about the elbow pivot $O$ of the weights of the forearm and the sphere. What must the biceps tension force be so that the overall moment about $O$ is zero?

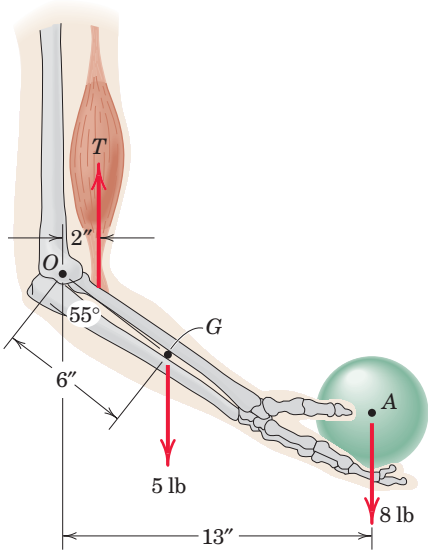


**Problem 2/49**

**2/50** The mechanism of Prob. 2/16 is repeated here. For the conditions $\theta = 40°$, $T = 150$ N, and $r = 200$ mm, determine the moment about $O$ of the tension $T$ applied by cable $AB$ to point $A$.

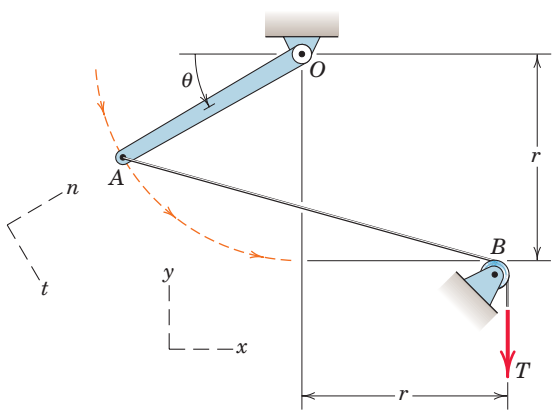


**Problem 2/50**

**2/51** In order to raise the flagpole $OC$, a light frame $OAB$ is attached to the pole and a tension of 780 lb is developed in the hoisting cable by the power winch $D$. Calculate the moment $M_O$ of this tension about the hinge point $O$.

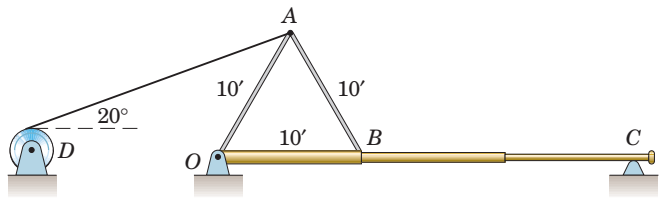


**Problem 2/51**

**2/52** Determine the angle $\theta$ which will maximize the moment $M_O$ of the 50-lb force about the shaft axis at $O$. Also compute $M_O$.

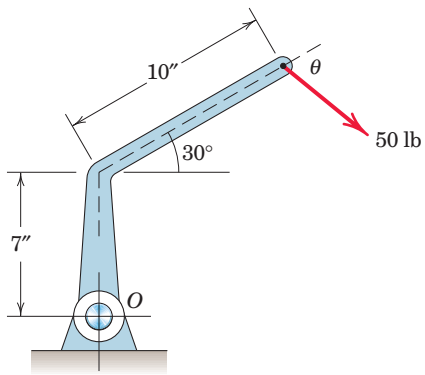


**Problem 2/52**

**2/53** The spring-loaded follower $A$ bears against the circular portion of the cam until the lobe of the cam lifts the plunger. The force required to lift the plunger is proportional to its vertical movement $h$ from its lowest position. For design purposes determine the angle $\theta$ for which the moment of the contact force on the cam about the bearing $O$ is a maximum. In the enlarged view of the contact, neglect the small distance between the actual contact point $B$ and the end $C$ of the lobe.

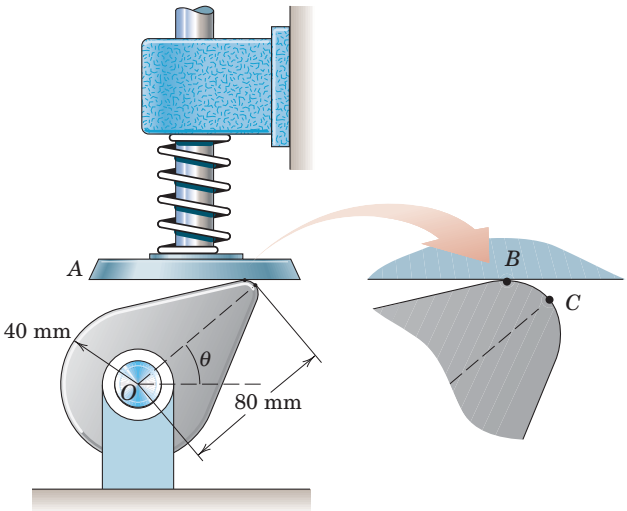


**Problem 2/53**

**2/54** As the result of a wind blowing normal to the plane of the rectangular sign, a uniform pressure of 3.5 lb/ft$^2$ is exerted in the direction shown in the figure. Determine the moment of the resulting force about point $O$. Express your result as a vector using the coordinates shown.

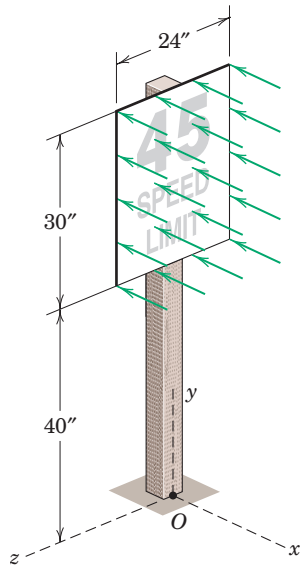


**Problem 2/54**

**2/55** An exerciser begins with his arm in the relaxed vertical position $OA$, at which the elastic band is unstretched. He then rotates his arm to the horizontal position $OB$. The elastic modulus of the band is $k = 60$ N/m—that is, 60 N of force is required to stretch the band each additional meter of elongation. Determine the moment about $O$ of the force which the band exerts on the hand $B$.

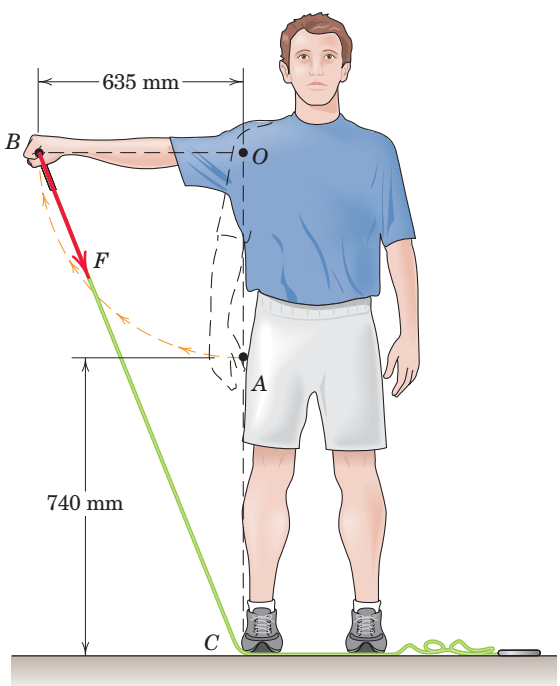


**Problem 2/55**

**2/56** The rocker arm $BD$ of an automobile engine is supported by a nonrotating shaft at $C$. If the design value of the force exerted by the pushrod $AB$ on the rocker arm is 80 lb, determine the force which the valve stem $DE$ must exert at $D$ in order for the combined moment about point $C$ to be zero. Compute the resultant of these two forces exerted on the rocker arm. Note that the points $B$, $C$, and $D$ lie on a horizontal line and that both the pushrod and valve stem exert forces along their axes.

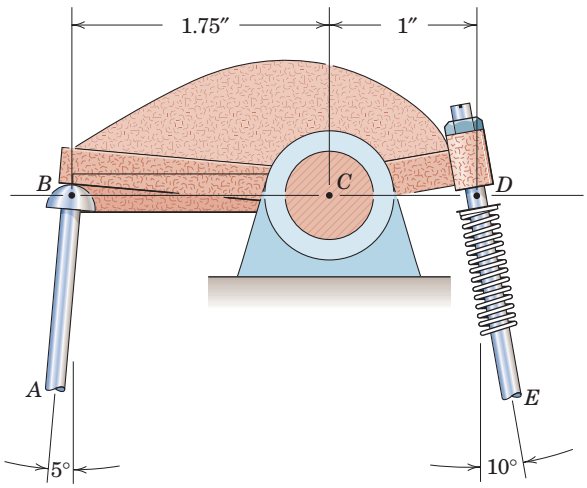


**Problem 2/56**

**2/57** The small crane is mounted along the side of a pickup bed and facilitates the handling of heavy loads. When the boom elevation angle is $\theta = 40°$, the force in the hydraulic cylinder $BC$ is 4.5 kN, and this force applied at point $C$ is in the direction from $B$ to $C$ (the cylinder is in compression). Determine the moment of this 4.5-kN force about the boom pivot point $O$.

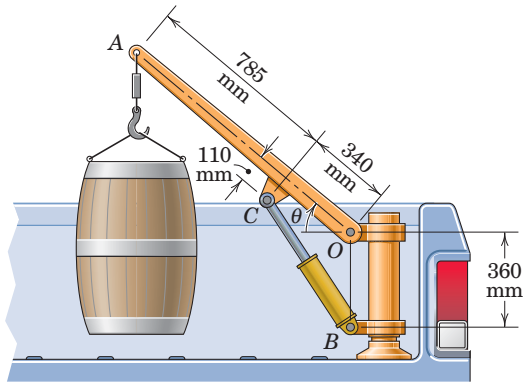


**Problem 2/57**

**2/58** The 120-N force is applied as shown to one end of the curved wrench. If $\alpha = 30°$, calculate the moment of $F$ about the center $O$ of the bolt. Determine the value of $\alpha$ which would maximize the moment about $O$; state the value of this maximum moment.

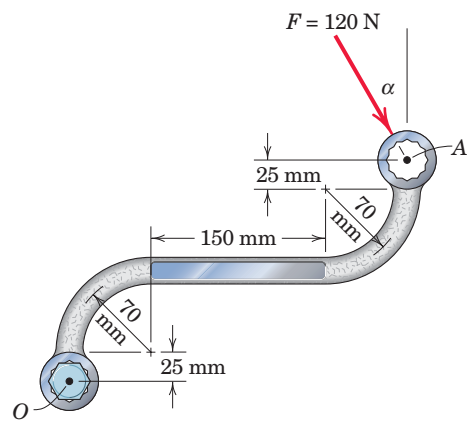


**Problem 2/58**

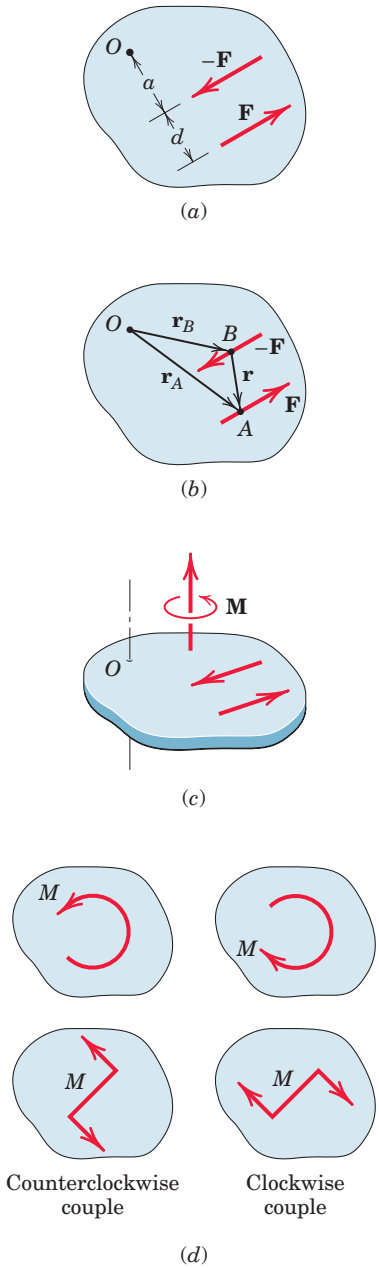


**Figure 2/10**

## 2/5 Couple

The moment produced by two equal, opposite, and noncollinear forces is called a *couple*. Couples have certain unique properties and have important applications in mechanics.

Consider the action of two equal and opposite forces $\mathbf{F}$ and $-\mathbf{F}$ a distance $d$ apart, as shown in Fig. 2/10$a$. These two forces cannot be combined into a single force because their sum in every direction is zero. Their only effect is to produce a tendency of rotation. The combined moment of the two forces about an axis normal to their plane and passing through any point such as $O$ in their plane is the couple $\mathbf{M}$. This couple has a magnitude

$$M = F(a + d) - Fa$$

or

$$M = Fd$$

Its direction is counterclockwise when viewed from above for the case illustrated. Note especially that the magnitude of the couple is independent of the distance $a$ which locates the forces with respect to the moment center $O$. It follows that the moment of a couple has the same value for all moment centers.

### Vector Algebra Method

We may also express the moment of a couple by using vector algebra. With the cross-product notation of Eq. 2/6, the combined moment about point $O$ of the forces forming the couple of Fig. 2/10$b$ is

$$\mathbf{M} = \mathbf{r}_A \times \mathbf{F} + \mathbf{r}_B \times (-\mathbf{F}) = (\mathbf{r}_A - \mathbf{r}_B) \times \mathbf{F}$$

where $\mathbf{r}_A$ and $\mathbf{r}_B$ are position vectors which run from point $O$ to arbitrary points $A$ and $B$ on the lines of action of $\mathbf{F}$ and $-\mathbf{F}$, respectively. Because $\mathbf{r}_A - \mathbf{r}_B = \mathbf{r}$, we can express $\mathbf{M}$ as

$$\mathbf{M} = \mathbf{r} \times \mathbf{F}$$

Here again, the moment expression contains no reference to the moment center $O$ and, therefore, is the same for all moment centers. Thus, we may represent $\mathbf{M}$ by a free vector, as shown in Fig. 2/10$c$, where the direction of $\mathbf{M}$ is normal to the plane of the couple and the sense of $\mathbf{M}$ is established by the right-hand rule.

Because the couple vector $\mathbf{M}$ is always perpendicular to the plane of the forces which constitute the couple, in two-dimensional analysis we can represent the sense of a couple vector as clockwise or counterclockwise by one of the conventions shown in Fig. 2/10$d$. Later, when we deal with couple vectors in three-dimensional problems, we will make full use of vector notation to represent them, and the mathematics will automatically account for their sense.

### Equivalent Couples

Changing the values of $F$ and $d$ does not change a given couple as long as the product $Fd$ remains the same. Likewise, a couple is not affected if the forces act in a different but parallel plane. Figure 2/11

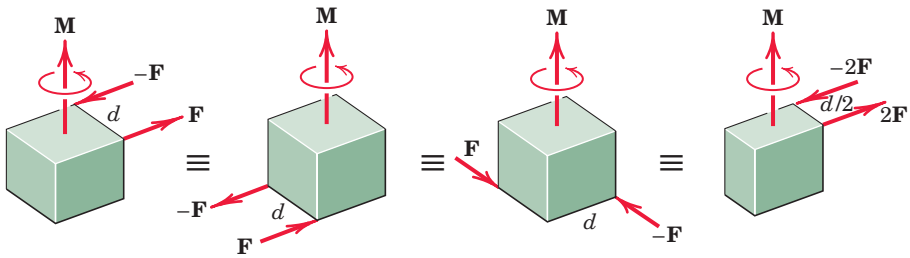


**Figure 2/11**

shows four different configurations of the same couple **M**. In each of the four cases, the couples are equivalent and are described by the same free vector which represents the identical tendencies to rotate the bodies.

## Force–Couple Systems

The effect of a force acting on a body is the tendency to push or pull the body in the direction of the force, and to rotate the body about any fixed axis which does not intersect the line of the force. We can represent this dual effect more easily by replacing the given force by an equal parallel force and a couple to compensate for the change in the moment of the force.

The replacement of a force by a force and a couple is illustrated in Fig. 2/12, where the given force **F** acting at point $A$ is replaced by an equal force **F** at some point $B$ and the counterclockwise couple $M = Fd$. The transfer is seen in the middle figure, where the equal and opposite forces **F** and $-$**F** are added at point $B$ without introducing any net external effects on the body. We now see that the original force at $A$ and the equal and opposite one at $B$ constitute the couple $M = Fd$, which is counterclockwise for the sample chosen, as shown in the right-hand part of the figure. Thus, we have replaced the original force at $A$ by the same force acting at a different point $B$ and a couple, without altering the external effects of the original force on the body. The combination of the force and couple in the right-hand part of Fig. 2/12 is referred to as a *force–couple system*.

By reversing this process, we can combine a given couple and a force which lies in the plane of the couple (normal to the couple vector) to produce a single, equivalent force. Replacement of a force by an equivalent force–couple system, and the reverse procedure, have many applications in mechanics and should be mastered.

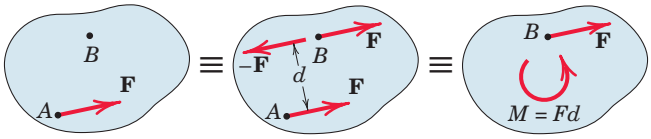


**Figure 2/12**

## SAMPLE PROBLEM 2/7

The rigid structural member is subjected to a couple consisting of the two 100-N forces. Replace this couple by an equivalent couple consisting of the two forces **P** and −**P**, each of which has a magnitude of 400 N. Determine the proper angle $\theta$.

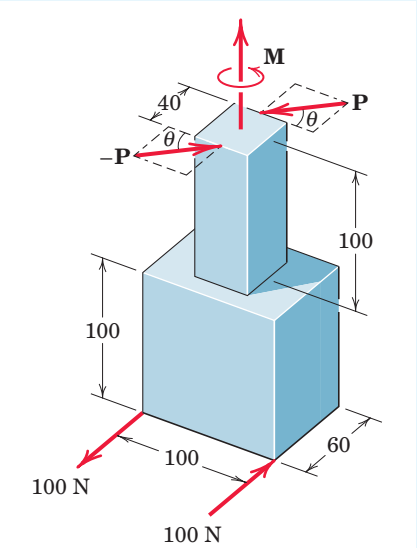


**Solution.** The original couple is counterclockwise when the plane of the forces is viewed from above, and its magnitude is

$[M = Fd]$ $\qquad M = 100(0.1) = 10\ \text{N}\cdot\text{m}$

The forces **P** and −**P** produce a counterclockwise couple

$$M = 400(0.040)\cos\theta$$

1 Equating the two expressions gives

$$10 = (400)(0.040)\cos\theta$$

$$\theta = \cos^{-1}\frac{10}{16} = 51.3^\circ \qquad \textit{Ans.}$$

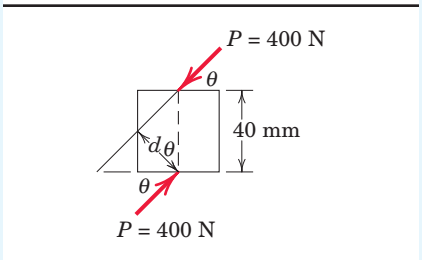


### Helpful Hint

1 Since the two equal couples are parallel free vectors, the only dimensions which are relevant are those which give the perpendicular distances between the forces of the couples.

## SAMPLE PROBLEM 2/8

Replace the horizontal 80-lb force acting on the lever by an equivalent system consisting of a force at $O$ and a couple.

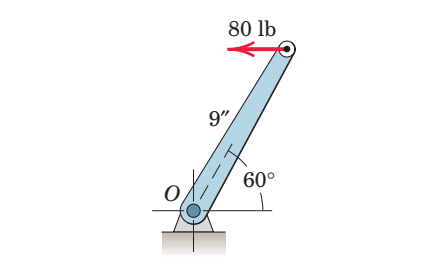


**Solution.** We apply two equal and opposite 80-lb forces at $O$ and identify the counterclockwise couple

$[M = Fd]$ $\qquad M = 80(9\sin 60^\circ) = 624\ \text{lb-in.} \qquad \textit{Ans.}$

1 Thus, the original force is equivalent to the 80-lb force at $O$ and the 624-lb-in. couple as shown in the third of the three equivalent figures.

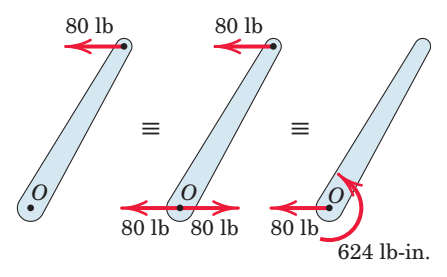


### Helpful Hint

1 The reverse of this problem is often encountered, namely, the replacement of a force and a couple by a single force. Proceeding in reverse is the same as replacing the couple by two forces, one of which is equal and opposite to the 80-lb force at $O$. The moment arm to the second force would be $M/F = 624/80 = 7.79$ in., which is $9\sin 60^\circ$, thus determining the line of action of the single resultant force of 80 lb.

# PROBLEMS

## *Introductory Problems*

**2/59** Compute the combined moment of the two 90-lb forces about (*a*) point *O* and (*b*) point *A*.

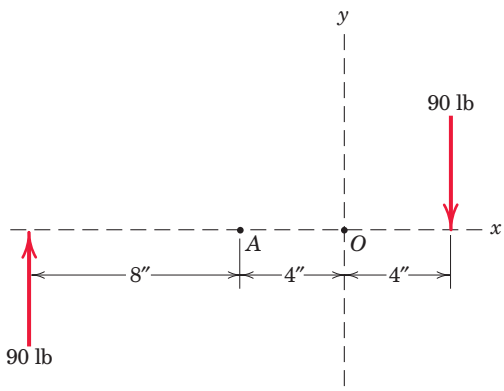


**Problem 2/59**

**2/60** Replace the 12-kN force acting at point *A* by a force–couple system at (*a*) point *O* and (*b*) point *B*.

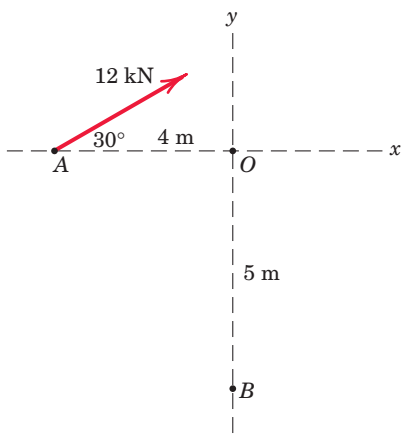


**Problem 2/60**

**2/61** Replace the force–couple system at point *O* by a single force. Specify the coordinate $y_A$ of the point on the *y*-axis through which the line of action of this resultant force passes.

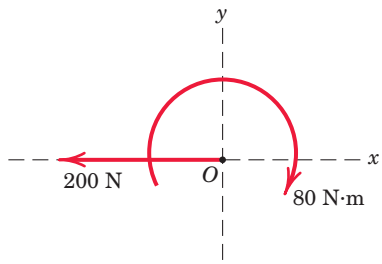


**Problem 2/61**

**2/62** The top view of a revolving entrance door is shown. Two persons simultaneously approach the door and exert force of equal magnitudes as shown. If the resulting moment about the door pivot axis at *O* is 25 N · m, determine the force magnitude *F*.

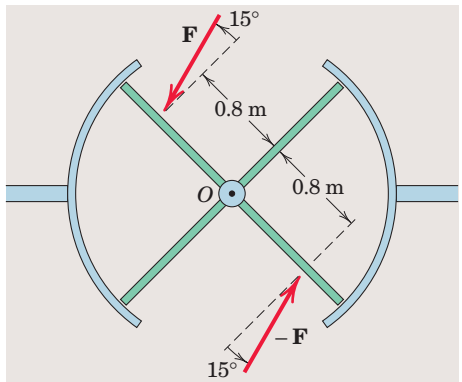


**Problem 2/62**

**2/63** Determine the moment associated with the couple applied to the rectangular plate. Reconcile the results with those for the individual special cases of $\theta = 0$, $b = 0$, and $h = 0$.

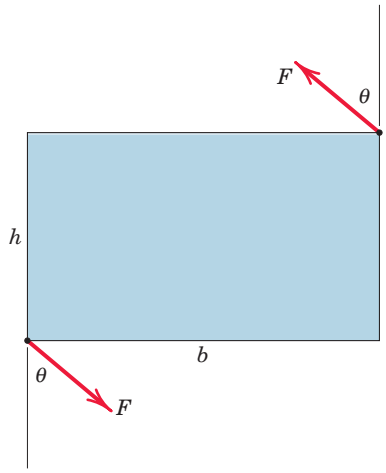


**Problem 2/63**

**2/64** As part of a test, the two aircraft engines are revved up and the propeller pitches are adjusted so as to result in the fore and aft thrusts shown. What force $F$ must be exerted by the ground on each of the main braked wheels at $A$ and $B$ to counteract the turning effect of the two propeller thrusts? Neglect any effects of the nose wheel $C$, which is turned 90° and unbraked.

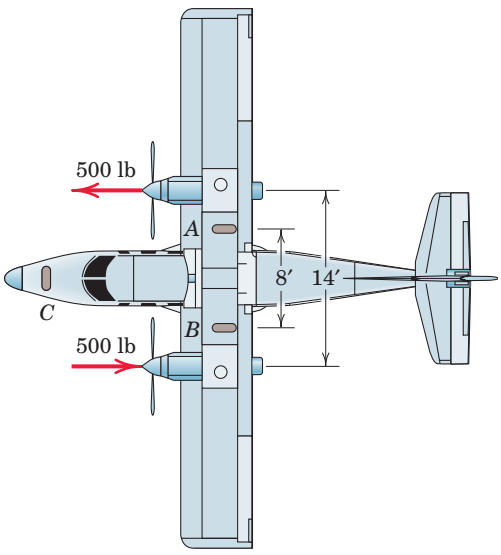


**Problem 2/64**

**2/65** The 7-lb force is applied by the control rod on the sector as shown. Determine the equivalent force–couple system at $O$.

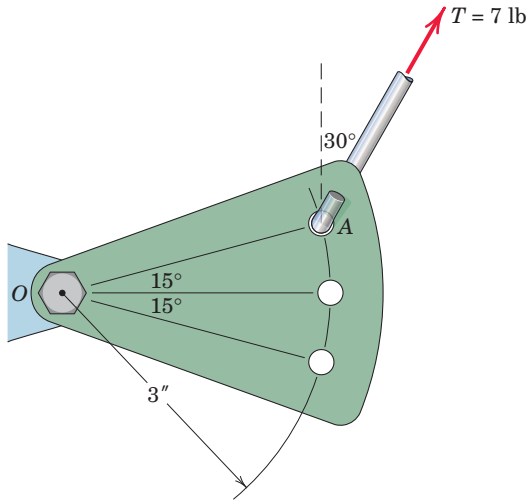


**Problem 2/65**

**2/66** Replace the 10-kN force acting on the steel column by an equivalent force–couple system at point $O$. This replacement is frequently done in the design of structures.

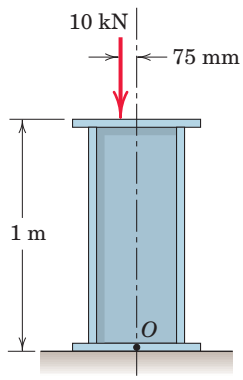


**Problem 2/66**

**2/67** Each propeller of the twin-screw ship develops a full-speed thrust of 300 kN. In maneuvering the ship, one propeller is turning full speed ahead and the other full speed in reverse. What thrust $P$ must each tug exert on the ship to counteract the effect of the ship's propellers?

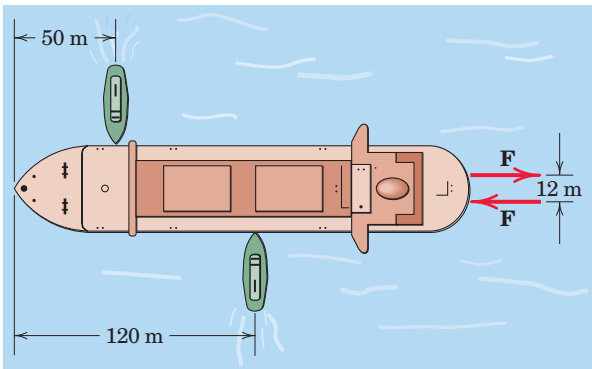


Problem 2/67

## Representative Problems

**2/68** The force–couple system at $A$ is to be replaced by a single equivalent force acting at a point $B$ on the vertical edge (or its extension) of the triangular plate. Determine the distance $d$ between $A$ and $B$.

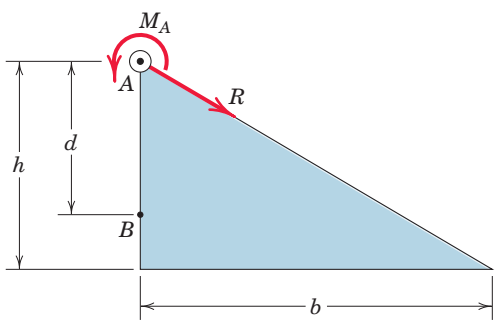


Problem 2/68

**2/69** A lug wrench is used to tighten a square-head bolt. If 50-lb forces are applied to the wrench as shown, determine the magnitude $F$ of the equal forces exerted on the four contact points on the 1-in. bolt head so that their external effect on the bolt is equivalent to that of the two 50-lb forces. Assume that the forces are perpendicular to the flats of the bolt head.

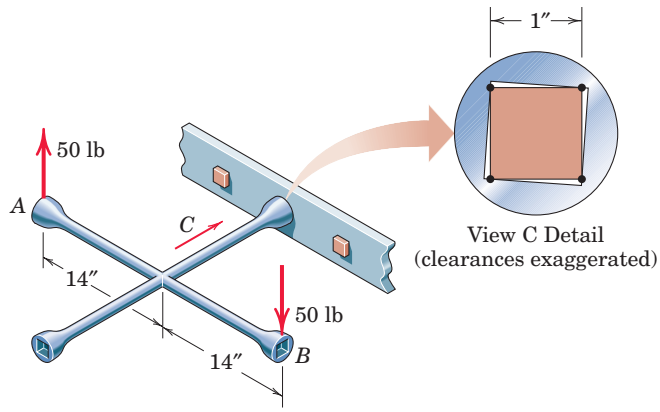


Problem 2/69

**2/70** A force–couple system acts at $O$ on the 60° circular sector. Determine the magnitude of the force $F$ if the given system can be replaced by a stand-alone force at corner $A$ of the sector.

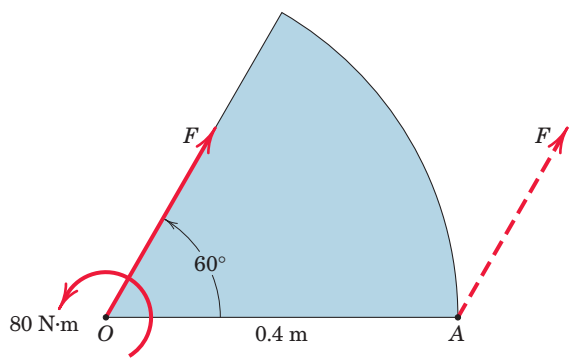


Problem 2/70

**2/71** During a steady right turn, a person exerts the forces shown on the steering wheel. Note that each force consists of a tangential component and a radially-inward component. Determine the moment exerted about the steering column at $O$.

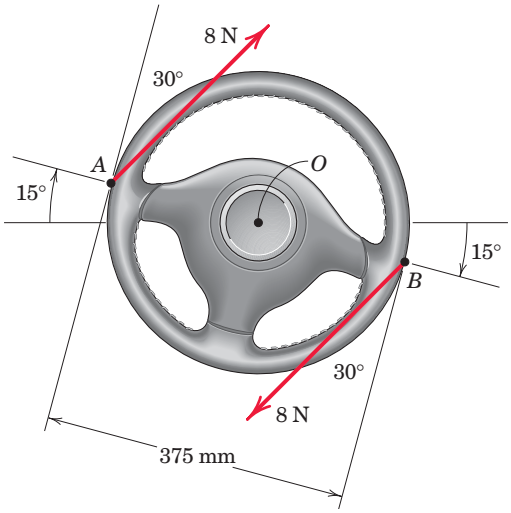


**Problem 2/71**

**2/72** A force $\mathbf{F}$ of magnitude 50 N is exerted on the automobile parking-brake lever at the position $x = 250$ mm. Replace the force by an equivalent force–couple system at the pivot point $O$.

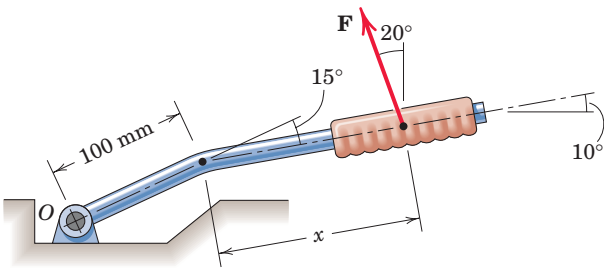


**Problem 2/72**

**2/73** The tie-rod $AB$ exerts the 250-N force on the steering knuckle $AO$ as shown. Replace this force by an equivalent force–couple system at $O$.

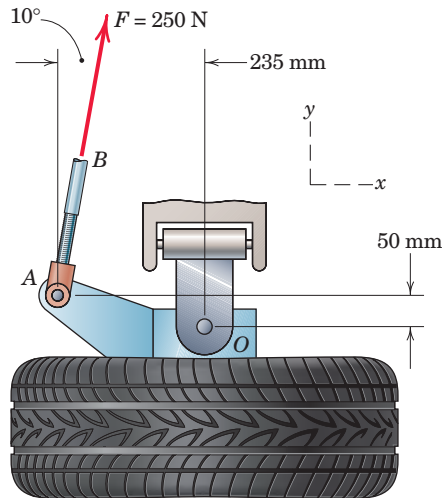


**Problem 2/73**

**2/74** The 250-N tension is applied to a cord which is securely wrapped around the periphery of the disk. Determine the equivalent force–couple system at point $C$. Begin by finding the equivalent force–couple system at $A$.

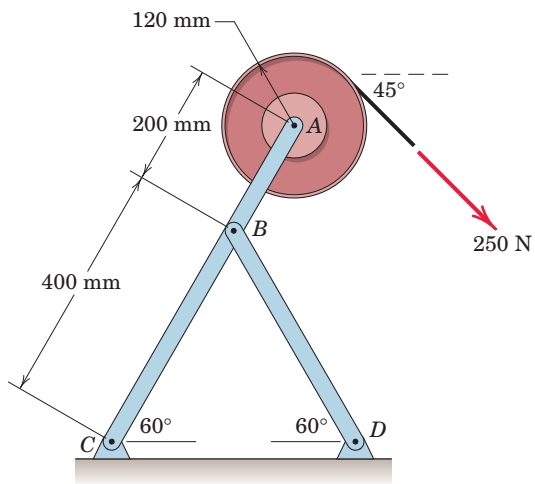


**Problem 2/74**

**2/75** The system consisting of the bar $OA$, two identical pulleys, and a section of thin tape is subjected to the two 180-N tensile forces shown in the figure. Determine the equivalent force–couple system at point $O$.

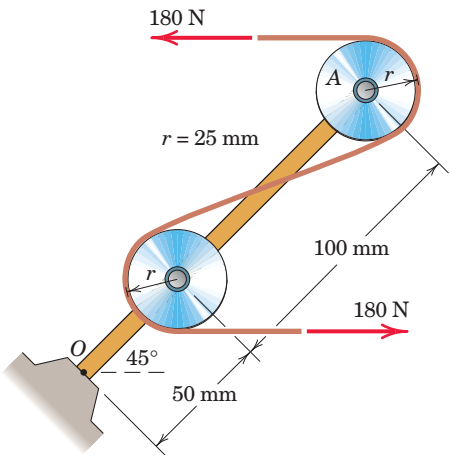


**Problem 2/75**

**2/76** Points $A$ and $B$ are the midpoints of the sides of the rectangle. Replace the given force $F$ acting at $A$ by a force–couple system at $B$.

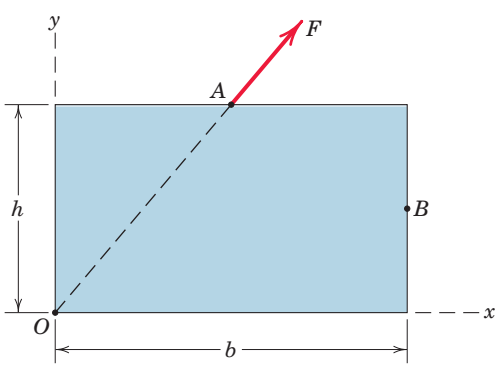


**Problem 2/76**

**2/77** The device shown is a part of an automobile seat-back-release mechanism. The part is subjected to the 4-N force exerted at $A$ and a 300-N·mm restoring moment exerted by a hidden torsional spring. Determine the $y$-intercept of the line of action of the single equivalent force.

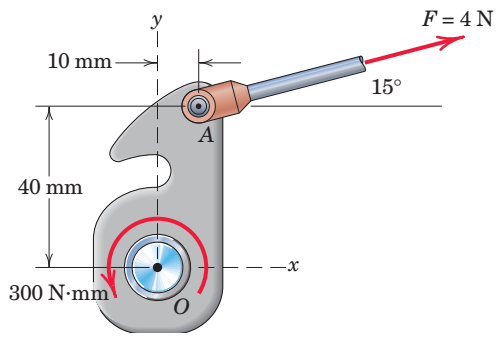


**Problem 2/77**

**2/78** The force $F$ acts along line $MA$, where $M$ is the midpoint of the radius along the $x$-axis. Determine the equivalent force–couple system at $O$ if $\theta = 40°$.

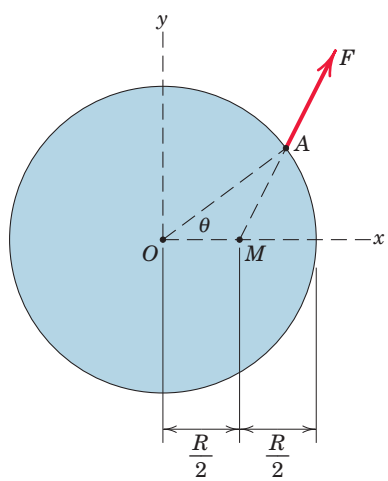


**Problem 2/78**

## 2/6 Resultants

The properties of force, moment, and couple were developed in the previous four articles. Now we are ready to describe the resultant action of a group or *system* of forces. Most problems in mechanics deal with a system of forces, and it is usually necessary to reduce the system to its simplest form to describe its action. The *resultant* of a system of forces is the simplest force combination which can replace the original forces without altering the external effect on the rigid body to which the forces are applied.

*Equilibrium* of a body is the condition in which the resultant of all forces acting on the body is zero. This condition is studied in statics. When the resultant of all forces on a body is not zero, the acceleration of the body is obtained by equating the force resultant to the product of the mass and acceleration of the body. This condition is studied in dynamics. Thus, the determination of resultants is basic to both statics and dynamics.

The most common type of force system occurs when the forces all act in a single plane, say, the $x$-$y$ plane, as illustrated by the system of three forces $\mathbf{F}_1$, $\mathbf{F}_2$, and $\mathbf{F}_3$ in Fig. 2/13$a$. We obtain the magnitude and direction of the resultant force $\mathbf{R}$ by forming the *force polygon* shown in part $b$ of the figure, where the forces are added head-to-tail in any sequence. Thus, for any system of coplanar forces we may write

$$\mathbf{R} = \mathbf{F}_1 + \mathbf{F}_2 + \mathbf{F}_3 + \cdots = \Sigma\mathbf{F}$$
$$R_x = \Sigma F_x \qquad R_y = \Sigma F_y \qquad R = \sqrt{(\Sigma F_x)^2 + (\Sigma F_y)^2}$$
$$\theta = \tan^{-1}\frac{R_y}{R_x} = \tan^{-1}\frac{\Sigma F_y}{\Sigma F_x} \qquad \textbf{(2/9)}$$

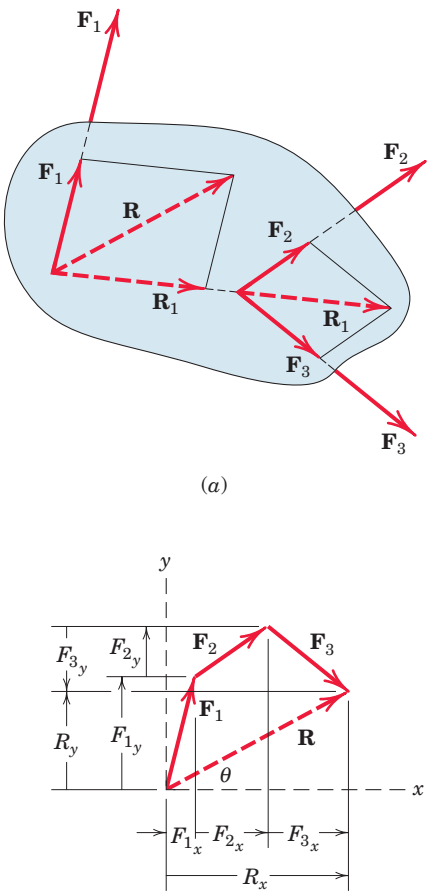


**Figure 2/13**

Graphically, the correct line of action of $\mathbf{R}$ may be obtained by preserving the correct lines of action of the forces and adding them by the parallelogram law. We see this in part $a$ of the figure for the case of three forces where the sum $\mathbf{R}_1$ of $\mathbf{F}_2$ and $\mathbf{F}_3$ is added to $\mathbf{F}_1$ to obtain $\mathbf{R}$. The principle of transmissibility has been used in this process.

### Algebraic Method

We can use algebra to obtain the resultant force and its line of action as follows:

1. Choose a convenient reference point and move all forces to that point. This process is depicted for a three-force system in Figs. 2/14$a$ and $b$, where $M_1$, $M_2$, and $M_3$ are the couples resulting from the transfer of forces $\mathbf{F}_1$, $\mathbf{F}_2$, and $\mathbf{F}_3$ from their respective original lines of action to lines of action through point $O$.
2. Add all forces at $O$ to form the resultant force $\mathbf{R}$, and add all couples to form the resultant couple $M_O$. We now have the single force–couple system, as shown in Fig. 2/14$c$.
3. In Fig. 2/14$d$, find the line of action of $\mathbf{R}$ by requiring $\mathbf{R}$ to have a moment of $M_O$ about point $O$. Note that the force systems of Figs. 2/14$a$ and 2/14$d$ are equivalent, and that $\Sigma(Fd)$ in Fig. 2/14$a$ is equal to $Rd$ in Fig. 2/14$d$.

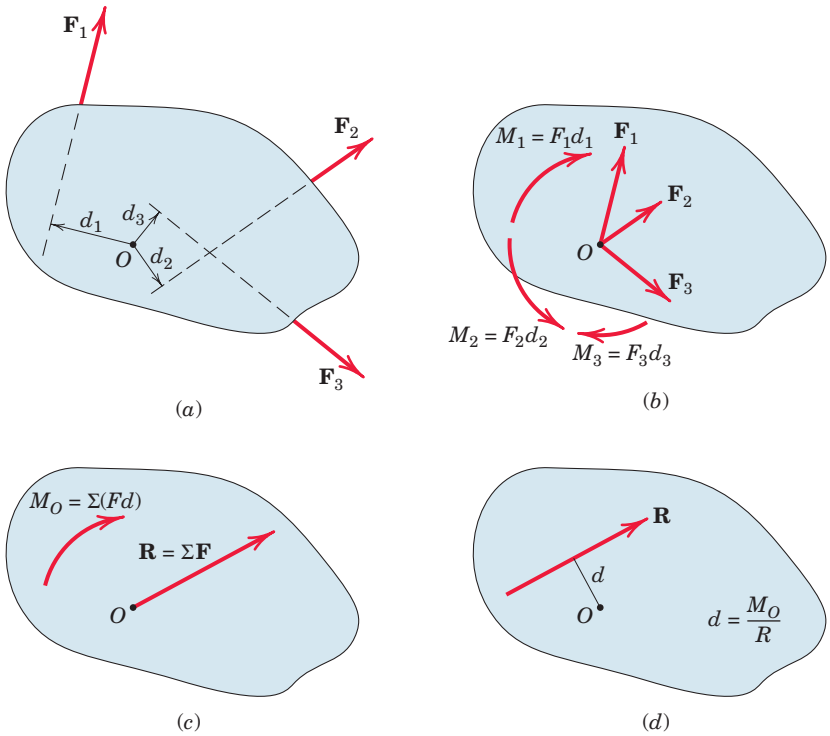


**Figure 2/14**

## Principle of Moments

This process is summarized in equation form by

$$\begin{aligned} \mathbf{R} &= \Sigma\mathbf{F} \\ M_O &= \Sigma M = \Sigma(Fd) \\ Rd &= M_O \end{aligned} \qquad \textbf{(2/10)}$$

The first two of Eqs. 2/10 reduce a given system of forces to a force–couple system at an arbitrarily chosen but convenient point $O$. The last equation specifies the distance $d$ from point $O$ to the line of action of $\mathbf{R}$, and states that the moment of the resultant force about any point $O$ equals the sum of the moments of the original forces of the system about the same point. This extends Varignon's theorem to the case of *nonconcurrent* force systems; we call this extension the *principle of moments*.

For a concurrent system of forces where the lines of action of all forces pass through a common point $O$, the moment sum $\Sigma M_O$ about that point is zero. Thus, the line of action of the resultant $\mathbf{R} = \Sigma\mathbf{F}$, determined by the first of Eqs. 2/10, passes through point $O$. For a parallel force system, select a coordinate axis in the direction of the forces. If the resultant force $\mathbf{R}$ for a given force system is zero, the resultant of the system need not be zero because the resultant may be a couple. The three forces in Fig. 2/15, for instance, have a zero resultant force but have a resultant clockwise couple $M = F_3d$.

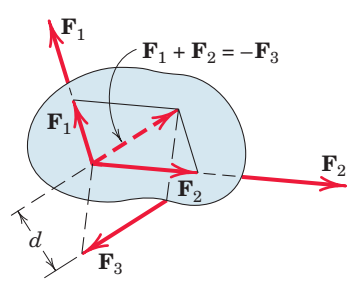


**Figure 2/15**

## SAMPLE PROBLEM 2/9

Determine the resultant of the four forces and one couple which act on the plate shown.

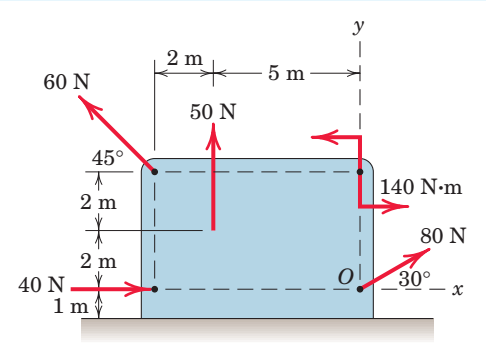


***Solution.*** Point $O$ is selected as a convenient reference point for the force–couple system which is to represent the given system.

$[R_x = \Sigma F_x]$ $\quad R_x = 40 + 80 \cos 30° - 60 \cos 45° = 66.9 \text{ N}$

$[R_y = \Sigma F_y]$ $\quad R_y = 50 + 80 \sin 30° + 60 \cos 45° = 132.4 \text{ N}$

$[R = \sqrt{R_x^2 + R_y^2}]$ $\quad R = \sqrt{(66.9)^2 + (132.4)^2} = 148.3 \text{ N}$ *Ans.*

$\left[\theta = \tan^{-1} \dfrac{R_y}{R_x}\right]$ $\quad \theta = \tan^{-1} \dfrac{132.4}{66.9} = 63.2°$ *Ans.*

1 $[M_O = \Sigma(Fd)]$ $\quad M_O = 140 - 50(5) + 60 \cos 45°(4) - 60 \sin 45°(7)$

$= -237 \text{ N}\cdot\text{m}$

The force–couple system consisting of $\mathbf{R}$ and $M_O$ is shown in Fig. *a*.

We now determine the final line of action of $\mathbf{R}$ such that $\mathbf{R}$ alone represents the original system.

$[Rd = |M_O|]$ $\quad 148.3d = 237 \quad d = 1.600 \text{ m}$ *Ans.*

Hence, the resultant $\mathbf{R}$ may be applied at any point on the line which makes a 63.2° angle with the $x$-axis and is tangent at point $A$ to a circle of 1.600-m radius with center $O$, as shown in part *b* of the figure. We apply the equation $Rd = M_O$ in an absolute-value sense (ignoring any sign of $M_O$) and let the physics of the situation, as depicted in Fig. *a*, dictate the final placement of $\mathbf{R}$. Had $M_O$ been counterclockwise, the correct line of action of $\mathbf{R}$ would have been the tangent at point $B$.

The resultant $\mathbf{R}$ may also be located by determining its intercept distance $b$ to point $C$ on the $x$-axis, Fig. *c*. With $R_x$ and $R_y$ acting through point $C$, only $R_y$ exerts a moment about $O$ so that

$$R_y b = |M_O| \qquad \text{and} \qquad b = \frac{237}{132.4} = 1.792 \text{ m}$$

Alternatively, the $y$-intercept could have been obtained by noting that the moment about $O$ would be due to $R_x$ only.

A more formal approach in determining the final line of action of $\mathbf{R}$ is to use the vector expression

$$\mathbf{r} \times \mathbf{R} = \mathbf{M}_O$$

where $\mathbf{r} = x\mathbf{i} + y\mathbf{j}$ is a position vector running from point $O$ to any point on the line of action of $\mathbf{R}$. Substituting the vector expressions for $\mathbf{r}$, $\mathbf{R}$, and $\mathbf{M}_O$ and carrying out the cross product result in

$$(x\mathbf{i} + y\mathbf{j}) \times (66.9\mathbf{i} + 132.4\mathbf{j}) = -237\mathbf{k}$$

$$(132.4x - 66.9y)\mathbf{k} = -237\mathbf{k}$$

Thus, the desired line of action, Fig. *c*, is given by

$$132.4x - 66.9y = -237$$

2 By setting $y = 0$, we obtain $x = -1.792$ m, which agrees with our earlier calculation of the distance $b$.

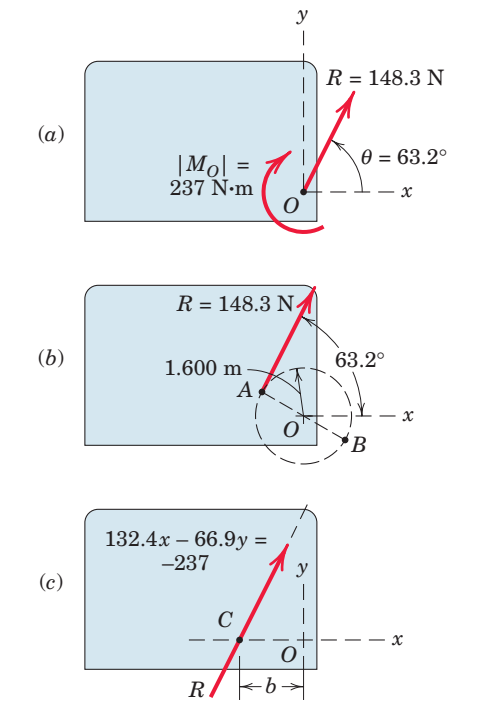


### Helpful Hints

1 We note that the choice of point $O$ as a moment center eliminates any moments due to the two forces which pass through $O$. Had the clockwise sign convention been adopted, $M_O$ would have been $+237$ N·m, with the plus sign indicating a sense which agrees with the sign convention. Either sign convention, of course, leads to the conclusion of a clockwise moment $M_O$.

2 Note that the vector approach yields sign information automatically, whereas the scalar approach is more physically oriented. You should master both methods.

# PROBLEMS

## Introductory Problems

**2/79** Two rods and one cable are attached to the support at $O$. If two of the forces are as shown, determine the magnitude $F$ and direction $\theta$ of the third force so that the resultant of the three forces is vertically downward with a magnitude of 1200 lb.

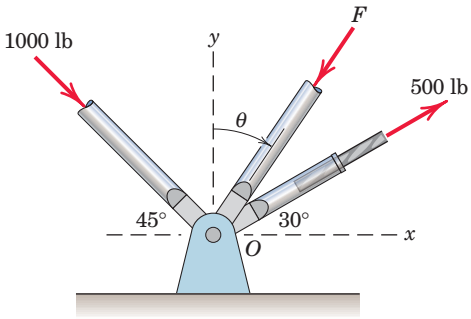


**Problem 2/79**

**2/80** Determine the resultant **R** of the three tension forces acting on the eye bolt. Find the magnitude of **R** and the angle $\theta_x$ which **R** makes with the positive $x$-axis.

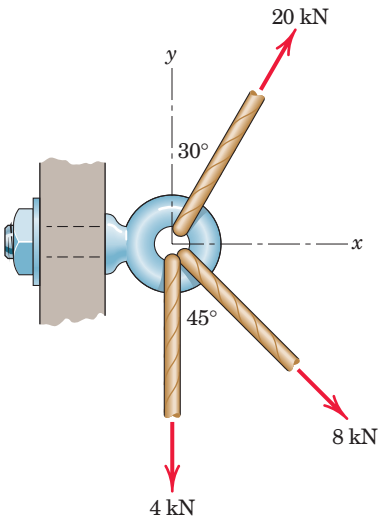


**Problem 2/80**

**2/81** Determine the equivalent force–couple system at the center $O$ for each of the three cases of forces being applied along the edges of a square plate of side $d$.

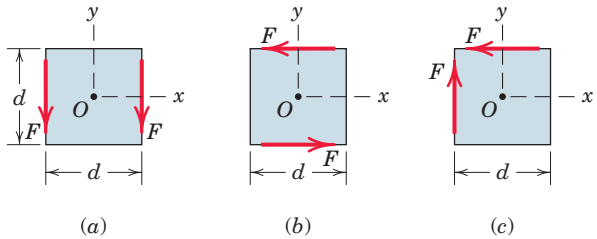


**Problem 2/81**

**2/82** Determine the equivalent force–couple system at the origin $O$ for each of the three cases of forces being applied along the edges of a regular hexagon of width $d$. If the resultant can be so expressed, replace this force–couple system with a single force.

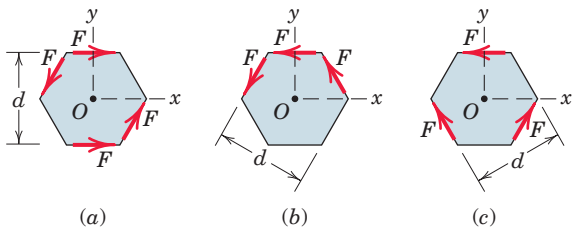


**Problem 2/82**

**2/83** Where does the resultant of the two forces act?

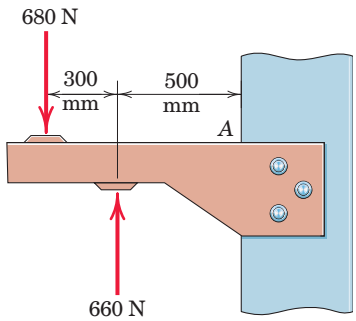


**Problem 2/83**

**2/84** Determine and locate the resultant **R** of the two forces and one couple acting on the I-beam.

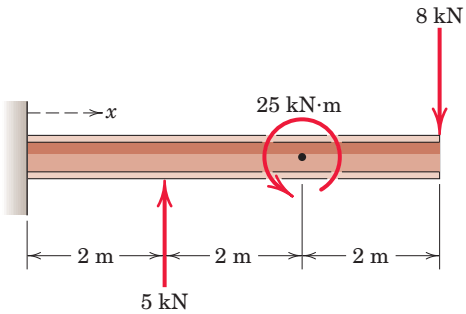


**Problem 2/84**

**2/85** Replace the two forces acting on the bent pipe by a single equivalent force **R**. Specify the distance $y$ from point $A$ to the line of action of **R**.

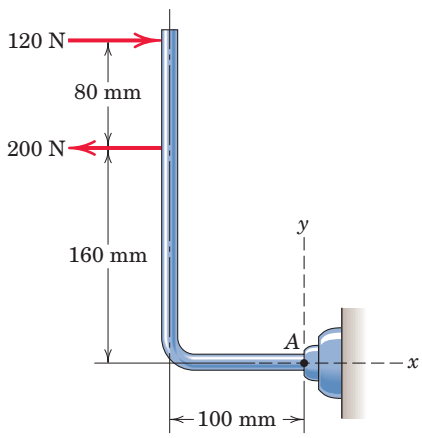


**Problem 2/85**

**2/86** Under nonuniform and slippery road conditions, the two forces shown are exerted on the two rear-drive wheels of the pickup truck, which has a limited-slip rear differential. Determine the $y$-intercept of the resultant of this force system.

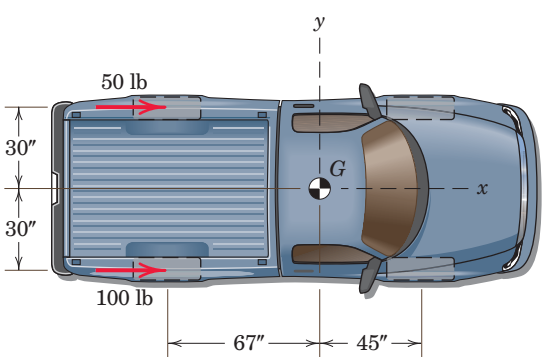


**Problem 2/86**

**2/87** The flanged steel cantilever beam with riveted bracket is subjected to the couple and two forces shown, and their effect on the design of the attachment at $A$ must be determined. Replace the two forces and couple by an equivalent couple $M$ and resultant force **R** at $A$.

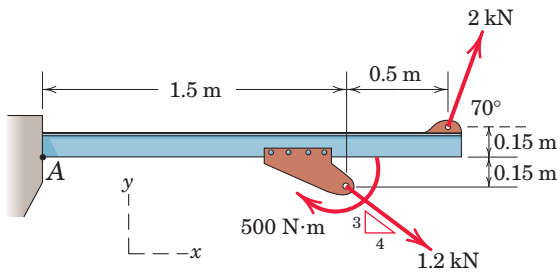


**Problem 2/87**

**2/88** If the resultant of the two forces and couple $M$ passes through point $O$, determine $M$.

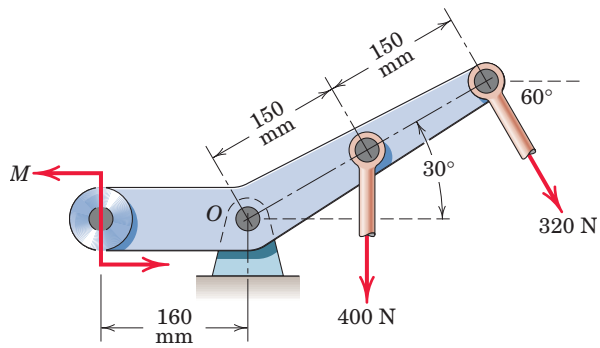


**Problem 2/88**

**2/89** Replace the three forces which act on the bent bar by a force–couple system at the support point $A$. Then determine the $x$-intercept of the line of action of the stand-alone resultant force **R**.

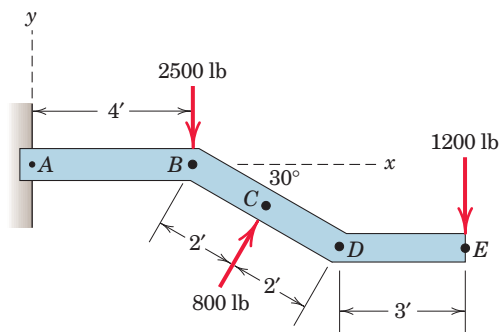


**Problem 2/89**

**2/90** A commercial airliner with four jet engines, each producing 90 kN of forward thrust, is in a steady, level cruise when engine number 3 suddenly fails. Determine and locate the resultant of the three remaining engine thrust vectors. Treat this as a two-dimensional problem.

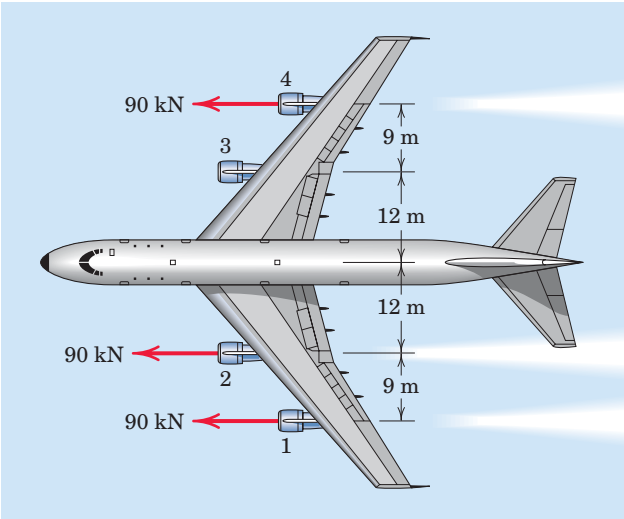


**Problem 2/90**

## *Representative Problems*

**2/91** The directions of the two thrust vectors of an experimental aircraft can be independently changed from the conventional forward direction within limits. For the thrust configuration shown, determine the equivalent force–couple system at point $O$. Then replace this force–couple system by a single force and specify the point on the $x$-axis through which the line of action of this resultant passes. These results are vital to assessing design performance.

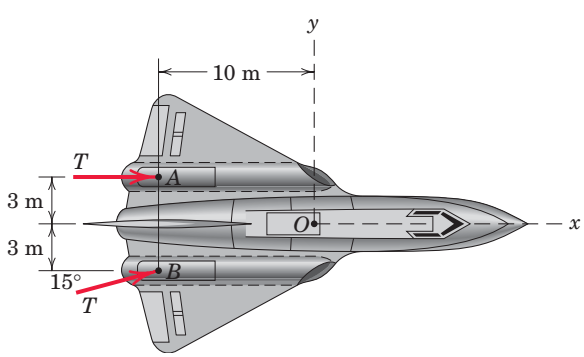


**Problem 2/91**

**2/92** Determine the $x$- and $y$-axis intercepts of the line of action of the resultant of the three loads applied to the gearset.

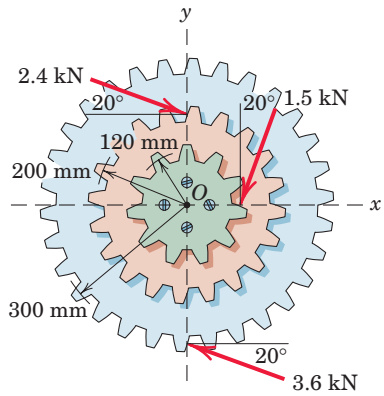


**Problem 2/92**

**2/93** Determine the resultant **R** of the three forces acting on the simple truss. Specify the points on the $x$- and $y$-axes through which **R** must pass.

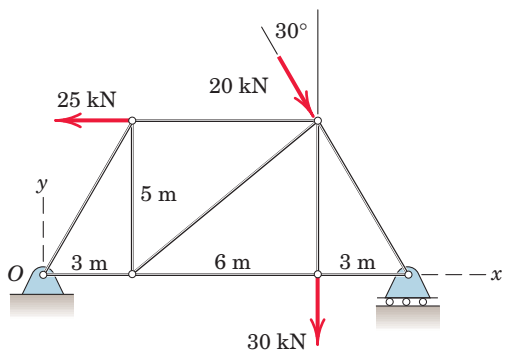


**Problem 2/93**

**2/94** The asymmetric roof truss is of the type used when a near normal angle of incidence of sunlight onto the south-facing surface *ABC* is desirable for solar energy purposes. The five vertical loads represent the effect of the weights of the truss and supported roofing materials. The 400-N load represents the effect of wind pressure. Determine the equivalent force–couple system at *A*. Also, compute the *x*-intercept of the line of action of the system resultant treated as a single force **R**.

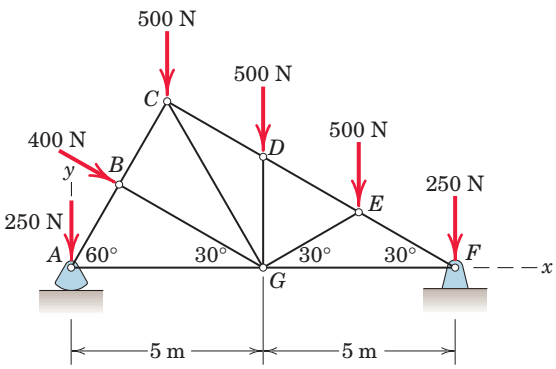


**Problem 2/94**

**2/95** As part of a design test, the camshaft–drive sprocket is fixed and then the two forces shown are applied to a length of belt wrapped around the sprocket. Find the resultant of this system of two forces and determine where its line of action intersects both the *x*- and *y*-axes.

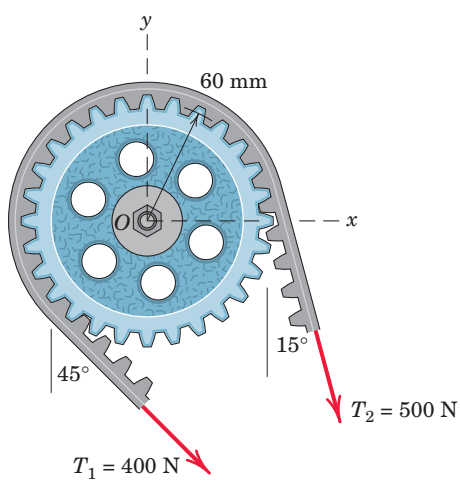


**Problem 2/95**

**2/96** While sliding a desk toward the doorway, three students exert the forces shown in the overhead view. Determine the equivalent force–couple system at point *A*. Then determine the equation of the line of action of the resultant force.

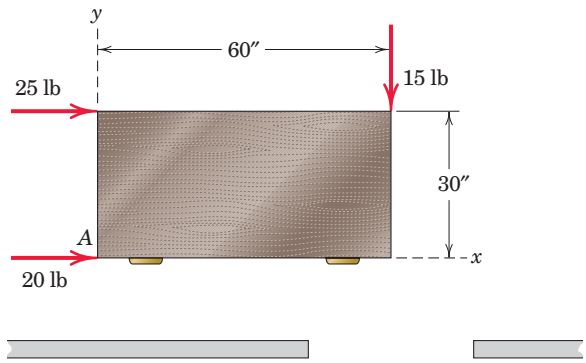


**Problem 2/96**

**2/97** Under nonuniform and slippery road conditions, the four forces shown are exerted on the four drive wheels of the all-wheel-drive vehicle. Determine the resultant of this system and the *x*- and *y*-intercepts of its line of action. Note that the front and rear tracks are equal (i.e., $\overline{AB} = \overline{CD}$).

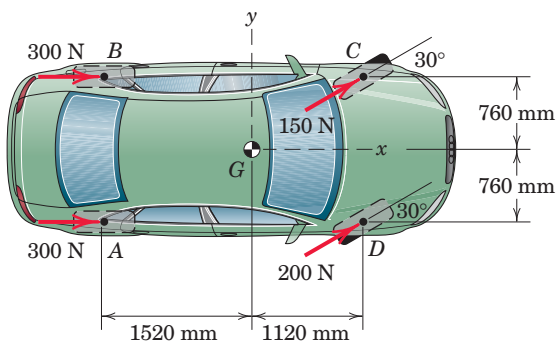


**Problem 2/97**

**2/98** A rear-wheel-drive car is stuck in the snow between other parked cars as shown. In an attempt to free the car, three students exert forces on the car at points $A$, $B$, and $C$ while the driver's actions result in a forward thrust of 40 lb acting parallel to the plane of rotation of each rear wheel. Treating the problem as two-dimensional, determine the equivalent force–couple system at the car center of mass $G$ and locate the position $x$ of the point on the car centerline through which the resultant passes. Neglect all forces not shown.

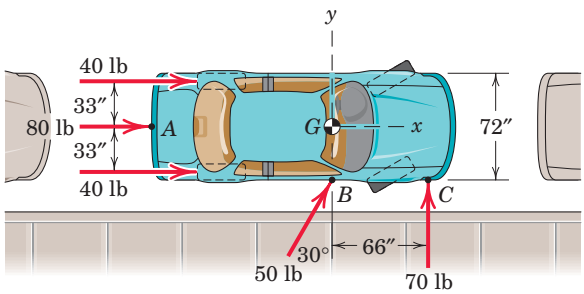


**Problem 2/98**

**2/99** An exhaust system for a pickup truck is shown in the figure. The weights $W_h$, $W_m$, and $W_t$ of the headpipe, muffler, and tailpipe are 10, 100, and 50 N, respectively, and act at the indicated points. If the exhaust-pipe hanger at point $A$ is adjusted so that its tension $F_A$ is 50 N, determine the required forces in the hangers at points $B$, $C$, and $D$ so that the force–couple system at point $O$ is zero. Why is a zero force–couple system at $O$ desirable?

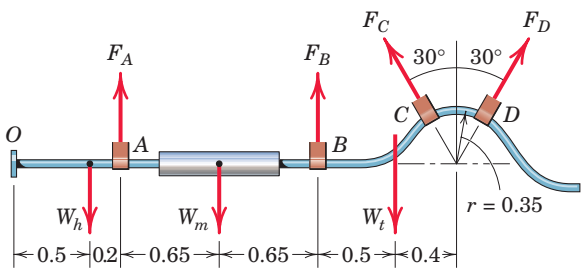


Dimensions in meters

**Problem 2/99**

**2/100** The pedal–chainwheel unit of a bicycle is shown in the figure. The left foot of the rider exerts the 40-lb force, while the use of toe clips allows the right foot to exert the nearly upward 20-lb force. Determine the equivalent force–couple system at point $O$. Also, determine the equation of the line of action of the system resultant treated as a single force $\mathbf{R}$. Treat the problem as two-dimensional.

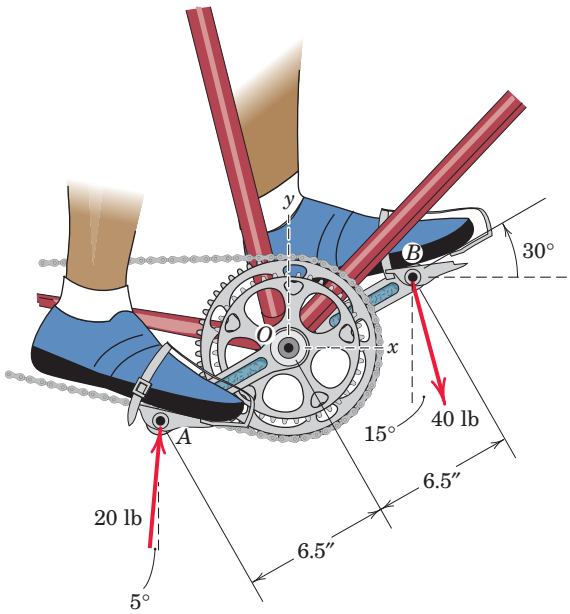


**Problem 2/100**

## SECTION B THREE-DIMENSIONAL FORCE SYSTEMS

### 2/7 Rectangular Components

Many problems in mechanics require analysis in three dimensions, and for such problems it is often necessary to resolve a force into its three mutually perpendicular components. The force **F** acting at point $O$ in Fig. 2/16 has the *rectangular components* $F_x$, $F_y$, $F_z$, where

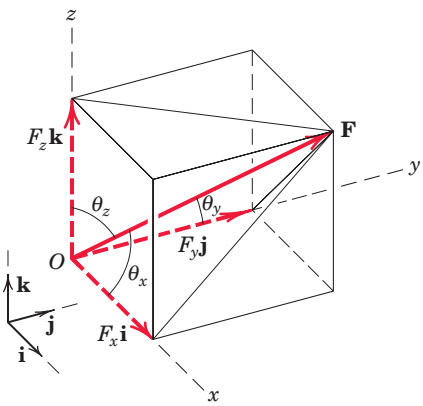


Figure 2/16

$$\begin{aligned} F_x &= F\cos\theta_x & F &= \sqrt{F_x{}^2 + F_y{}^2 + F_z{}^2} \\ F_y &= F\cos\theta_y & \mathbf{F} &= F_x\mathbf{i} + F_y\mathbf{j} + F_z\mathbf{k} \\ F_z &= F\cos\theta_z & \mathbf{F} &= F(\mathbf{i}\cos\theta_x + \mathbf{j}\cos\theta_y + \mathbf{k}\cos\theta_z) \end{aligned} \qquad \textbf{(2/11)}$$

The unit vectors **i**, **j**, and **k** are in the $x$-, $y$-, and $z$-directions, respectively. Using the direction cosines of **F**, which are $l = \cos\theta_x$, $m = \cos\theta_y$, and $n = \cos\theta_z$, where $l^2 + m^2 + n^2 = 1$, we may write the force as

$$\mathbf{F} = F(l\mathbf{i} + m\mathbf{j} + n\mathbf{k}) \qquad \textbf{(2/12)}$$

We may regard the right-side expression of Eq. 2/12 as the force magnitude $F$ times a unit vector $\mathbf{n}_F$ which characterizes the direction of **F**, or

$$\mathbf{F} = F\mathbf{n}_F \qquad \textbf{(2/12a)}$$

It is clear from Eqs. 2/12 and 2/12$a$ that $\mathbf{n}_F = l\mathbf{i} + m\mathbf{j} + n\mathbf{k}$, which shows that the scalar components of the unit vector $\mathbf{n}_F$ are the direction cosines of the line of action of **F**.

In solving three-dimensional problems, one must usually find the $x$, $y$, and $z$ scalar components of a force. In most cases, the direction of a force is described ($a$) by two points on the line of action of the force or ($b$) by two angles which orient the line of action.

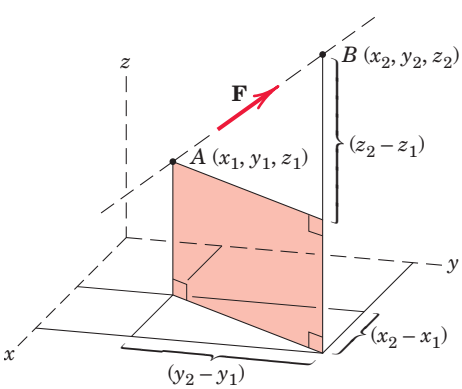


Figure 2/17

***(a) Specification by two points on the line of action of the force.*** If the coordinates of points $A$ and $B$ of Fig. 2/17 are known, the force **F** may be written as

$$\mathbf{F} = F\mathbf{n}_F = F\frac{\overrightarrow{AB}}{AB} = F\frac{(x_2 - x_1)\mathbf{i} + (y_2 - y_1)\mathbf{j} + (z_2 - z_1)\mathbf{k}}{\sqrt{(x_2 - x_1)^2 + (y_2 - y_1)^2 + (z_2 - z_1)^2}}$$

Thus the $x$, $y$, and $z$ scalar components of **F** are the scalar coefficients of the unit vectors **i**, **j**, and **k**, respectively.

***(b) Specification by two angles which orient the line of action of the force.*** Consider the geometry of Fig. 2/18. We assume that the angles $\theta$ and $\phi$ are known. First resolve **F** into horizontal and vertical components.

$$F_{xy} = F \cos \phi$$
$$F_z = F \sin \phi$$

Then resolve the horizontal component $F_{xy}$ into $x$- and $y$-components.

$$F_x = F_{xy} \cos \theta = F \cos \phi \cos \theta$$
$$F_y = F_{xy} \sin \theta = F \cos \phi \sin \theta$$

The quantities $F_x$, $F_y$, and $F_z$ are the desired scalar components of **F**.

The choice of orientation of the coordinate system is arbitrary, with convenience being the primary consideration. However, we must use a right-handed set of axes in our three-dimensional work to be consistent with the right-hand-rule definition of the cross product. When we rotate from the $x$- to the $y$-axis through the 90° angle, the positive direction for the $z$-axis in a right-handed system is that of the advancement of a right-handed screw rotated in the same sense. This is equivalent to the right-hand rule.

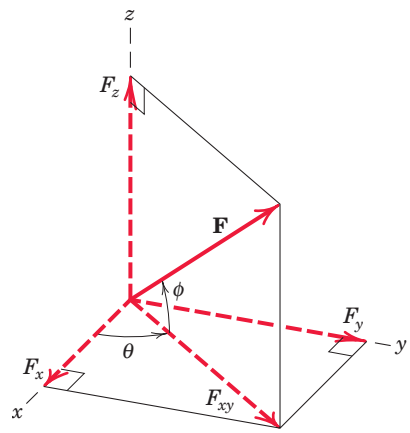


**Figure 2/18**

## Dot Product

We can express the rectangular components of a force **F** (or any other vector) with the aid of the vector operation known as the *dot* or *scalar product* (see item 6 in Art. C/7 of Appendix C). The dot product of two vectors **P** and **Q**, Fig. 2/19*a*, is defined as the product of their magnitudes times the cosine of the angle $\alpha$ between them. It is written as

$$\mathbf{P} \cdot \mathbf{Q} = PQ \cos \alpha$$

We can view this product either as the orthogonal projection $P \cos \alpha$ of **P** in the direction of **Q** multiplied by $Q$, or as the orthogonal projection $Q \cos \alpha$ of **Q** in the direction of **P** multiplied by $P$. In either case the dot product of the two vectors is a scalar quantity. Thus, for instance, we can express the scalar component $F_x = F \cos \theta_x$ of the force **F** in Fig. 2/16 as $F_x = \mathbf{F} \cdot \mathbf{i}$, where **i** is the unit vector in the $x$-direction.

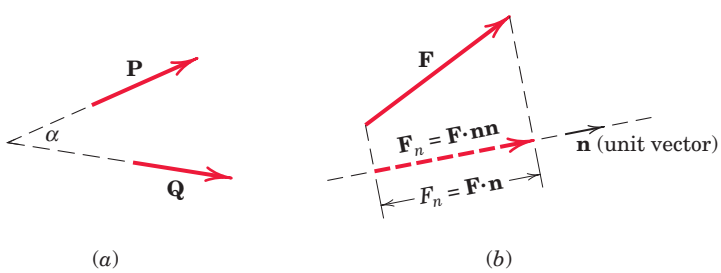


**Figure 2/19**

In more general terms, if $\mathbf{n}$ is a unit vector in a specified direction, the projection of $\mathbf{F}$ in the $\mathbf{n}$-direction, Fig. 2/19*b*, has the magnitude $F_n = \mathbf{F}\cdot\mathbf{n}$. If we want to express the projection in the $\mathbf{n}$-direction as a vector quantity, then we multiply its scalar component, expressed by $\mathbf{F}\cdot\mathbf{n}$, by the unit vector $\mathbf{n}$ to give $\mathbf{F}_n = (\mathbf{F}\cdot\mathbf{n})\mathbf{n}$. We may write this as $\mathbf{F}_n = \mathbf{F}\cdot\mathbf{nn}$ without ambiguity because the term $\mathbf{nn}$ is not defined, and so the complete expression cannot be misinterpreted as $\mathbf{F}\cdot(\mathbf{nn})$.

If the direction cosines of $\mathbf{n}$ are $\alpha$, $\beta$, and $\gamma$, then we may write $\mathbf{n}$ in vector component form like any other vector as

$$\mathbf{n} = \alpha\mathbf{i} + \beta\mathbf{j} + \gamma\mathbf{k}$$

where in this case its magnitude is unity. If the direction cosines of $\mathbf{F}$ with respect to reference axes $x$-$y$-$z$ are $l$, $m$, and $n$, then the projection of $\mathbf{F}$ in the $\mathbf{n}$-direction becomes

$$\begin{aligned} F_n = \mathbf{F}\cdot\mathbf{n} &= F(l\mathbf{i} + m\mathbf{j} + n\mathbf{k})\cdot(\alpha\mathbf{i} + \beta\mathbf{j} + \gamma\mathbf{k}) \\ &= F(l\alpha + m\beta + n\gamma) \end{aligned}$$

because

$$\mathbf{i}\cdot\mathbf{i} = \mathbf{j}\cdot\mathbf{j} = \mathbf{k}\cdot\mathbf{k} = 1$$

and

$$\mathbf{i}\cdot\mathbf{j} = \mathbf{j}\cdot\mathbf{i} = \mathbf{i}\cdot\mathbf{k} = \mathbf{k}\cdot\mathbf{i} = \mathbf{j}\cdot\mathbf{k} = \mathbf{k}\cdot\mathbf{j} = 0$$

The latter two sets of equations are true because $\mathbf{i}$, $\mathbf{j}$, and $\mathbf{k}$ have unit length and are mutually perpendicular.

## Angle between Two Vectors

If the angle between the force $\mathbf{F}$ and the direction specified by the unit vector $\mathbf{n}$ is $\theta$, then from the dot-product definition we have $\mathbf{F}\cdot\mathbf{n} = Fn\cos\theta = F\cos\theta$, where $|\mathbf{n}| = n = 1$. Thus, the angle between $\mathbf{F}$ and $\mathbf{n}$ is given by

$$\theta = \cos^{-1}\frac{\mathbf{F}\cdot\mathbf{n}}{F} \qquad \textbf{(2/13)}$$

In general, the angle between any two vectors $\mathbf{P}$ and $\mathbf{Q}$ is

$$\theta = \cos^{-1}\frac{\mathbf{P}\cdot\mathbf{Q}}{PQ} \qquad \textbf{(2/13a)}$$

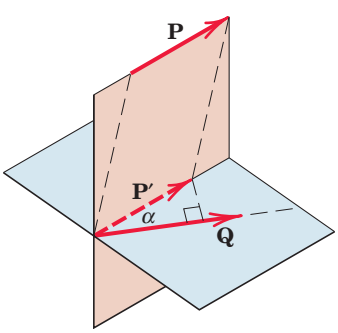

**Figure 2/20**

If a force $\mathbf{F}$ is perpendicular to a line whose direction is specified by the unit vector $\mathbf{n}$, then $\cos\theta = 0$, and $\mathbf{F}\cdot\mathbf{n} = 0$. Note that this relationship does not mean that either $\mathbf{F}$ or $\mathbf{n}$ is zero, as would be the case with scalar multiplication where $(A)(B) = 0$ requires that either $A$ or $B$ (or both) be zero.

The dot-product relationship applies to nonintersecting vectors as well as to intersecting vectors. Thus, the dot product of the nonintersecting vectors $\mathbf{P}$ and $\mathbf{Q}$ in Fig. 2/20 is $Q$ times the projection of $\mathbf{P}'$ on $\mathbf{Q}$, or $P'Q\cos\alpha = PQ\cos\alpha$ because $\mathbf{P}'$ and $\mathbf{P}$ are the same when treated as free vectors.

## SAMPLE PROBLEM 2/10

A force **F** with a magnitude of 100 N is applied at the origin $O$ of the axes $x$-$y$-$z$ as shown. The line of action of **F** passes through a point $A$ whose coordinates are 3 m, 4 m, and 5 m. Determine ($a$) the $x$, $y$, and $z$ scalar components of **F**, ($b$) the projection $F_{xy}$ of **F** on the $x$-$y$ plane, and ($c$) the projection $F_{OB}$ of **F** along the line $OB$.

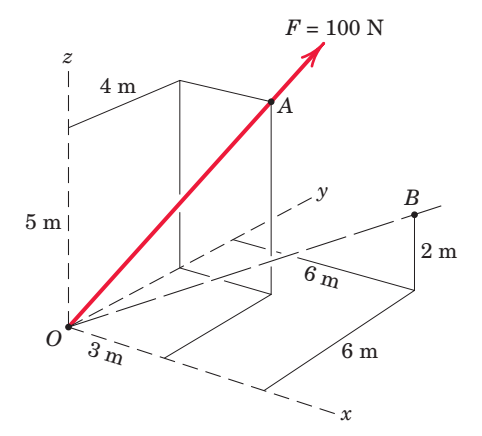


***Solution.*** ***Part (a).*** We begin by writing the force vector **F** as its magnitude $F$ times a unit vector $\mathbf{n}_{OA}$.

$$\mathbf{F} = F\mathbf{n}_{OA} = F\frac{\overrightarrow{OA}}{OA} = 100\left[\frac{3\mathbf{i} + 4\mathbf{j} + 5\mathbf{k}}{\sqrt{3^2 + 4^2 + 5^2}}\right]$$

$$= 100[0.424\mathbf{i} + 0.566\mathbf{j} + 0.707\mathbf{k}]$$

$$= 42.4\mathbf{i} + 56.6\mathbf{j} + 70.7\mathbf{k} \text{ N}$$

The desired scalar components are thus

1 $$F_x = 42.4 \text{ N} \qquad F_y = 56.6 \text{ N} \qquad F_z = 70.7 \text{ N} \qquad \textit{Ans.}$$

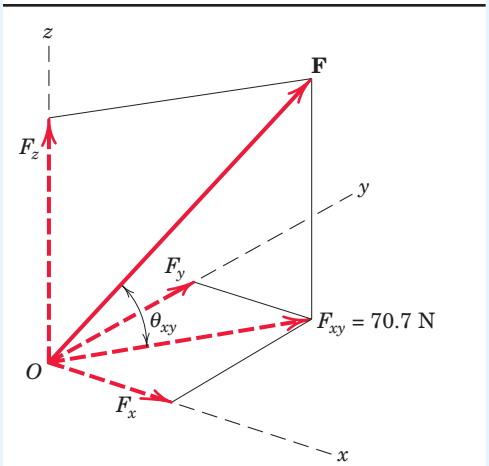


***Part (b).*** The cosine of the angle $\theta_{xy}$ between **F** and the $x$-$y$ plane is

$$\cos\theta_{xy} = \frac{\sqrt{3^2 + 4^2}}{\sqrt{3^2 + 4^2 + 5^2}} = 0.707$$

so that $F_{xy} = F\cos\theta_{xy} = 100(0.707) = 70.7$ N *Ans.*

***Part (c).*** The unit vector $\mathbf{n}_{OB}$ along $OB$ is

$$\mathbf{n}_{OB} = \frac{\overrightarrow{OB}}{OB} = \frac{6\mathbf{i} + 6\mathbf{j} + 2\mathbf{k}}{\sqrt{6^2 + 6^2 + 2^2}} = 0.688\mathbf{i} + 0.688\mathbf{j} + 0.229\mathbf{k}$$

The scalar projection of **F** on $OB$ is

2 $$F_{OB} = \mathbf{F}\cdot\mathbf{n}_{OB} = (42.4\mathbf{i} + 56.6\mathbf{j} + 70.7\mathbf{k})\cdot(0.688\mathbf{i} + 0.688\mathbf{j} + 0.229\mathbf{k})$$

$$= (42.4)(0.688) + (56.6)(0.688) + (70.7)(0.229)$$

$$= 84.4 \text{ N} \qquad \textit{Ans.}$$

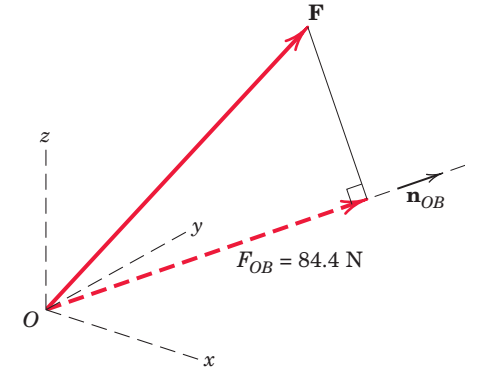


If we wish to express the projection as a vector, we write

$$\mathbf{F}_{OB} = \mathbf{F}\cdot\mathbf{n}_{OB}\mathbf{n}_{OB}$$

$$= 84.4(0.688\mathbf{i} + 0.688\mathbf{j} + 0.229\mathbf{k})$$

$$= 58.1\mathbf{i} + 58.1\mathbf{j} + 19.35\mathbf{k} \text{ N}$$

### Helpful Hints

1. In this example all scalar components are positive. Be prepared for the case where a direction cosine, and hence the scalar component, are negative.
2. The dot product automatically finds the projection or scalar component of **F** along line $OB$ as shown.

# PROBLEMS

## *Introductory Problems*

**2/101** Express the 900-lb force **F** as a vector in terms of the unit vectors **i**, **j**, and **k**. Determine the projection of **F** onto the $y$-axis.

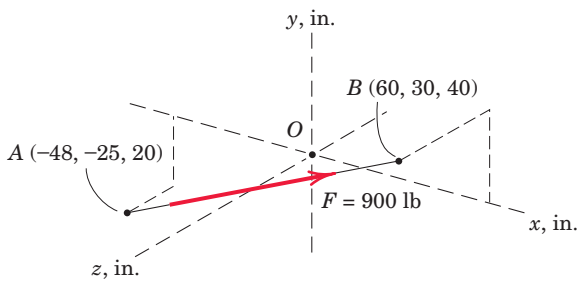


**Problem 2/101**

**2/102** Express the 5-kN force **F** as a vector in terms of the unit vectors **i**, **j**, and **k**. Determine the projections of **F** onto the $x$-axis and onto the line $OA$.

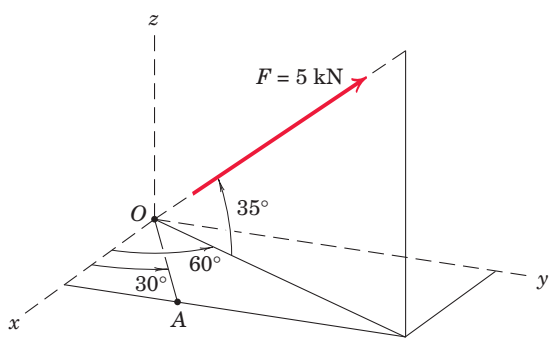


**Problem 2/102**

**2/103** The cable exerts a tension of 2 kN on the fixed bracket at $A$. Write the vector expression for the tension **T**.

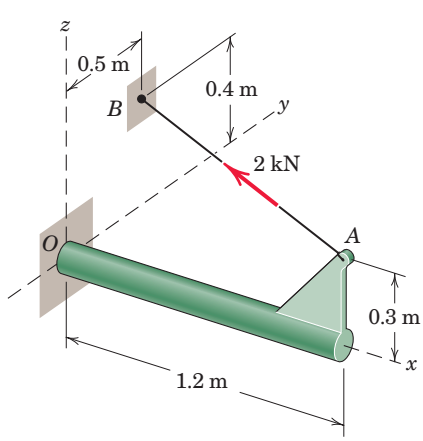


**Problem 2/103**

**2/104** In checking a recently installed fencepost for adequacy of the ground support, a person exerts a force $\mathbf{P} = -160\mathbf{i} + 40\mathbf{j} + 60\mathbf{k}$ N on the top of the post as shown. Determine the angles which **P** makes with the positive $x$-axis and with the $x$-$z$ plane.

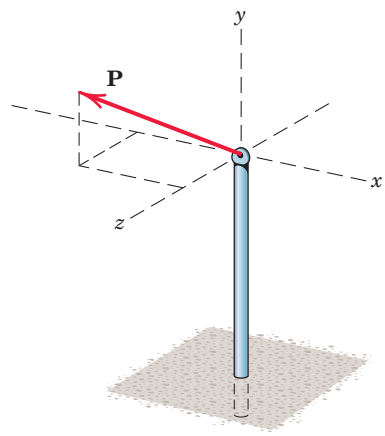


**Problem 2/104**

**2/105** The turnbuckle is tightened until the tension in the cable $AB$ equals 2.4 kN. Determine the vector expression for the tension **T** as a force acting on member $AD$. Also find the magnitude of the projection of **T** along the line $AC$.

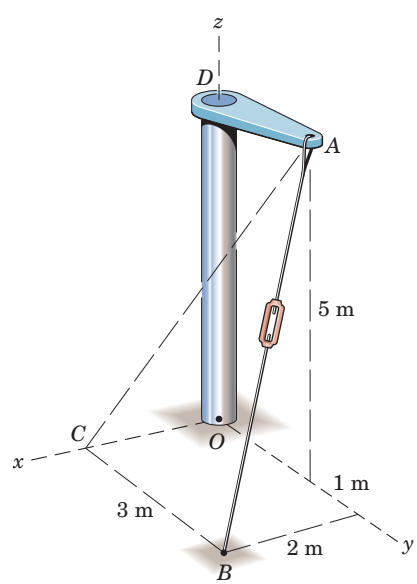


**Problem 2/105**

**2/106** The unstretched length of the spring is $b$. Determine the force which the spring exerts on point $B$ of the space frame if $b = 0.3$ m. The magnitude of the spring force is the spring constant $k$ multiplied by the deflection (lengthening or shortening) of the spring.

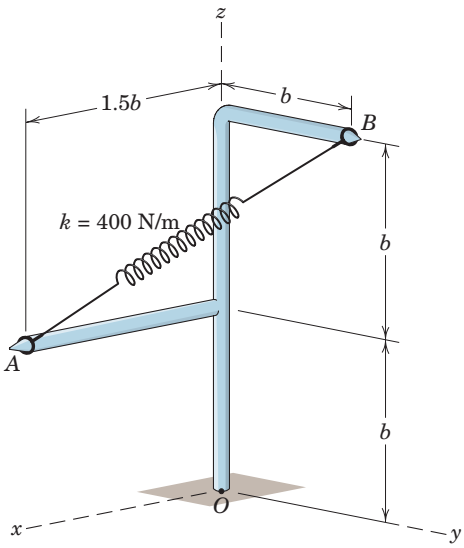


Problem 2/106

**2/107** The rigid pole and cross-arm assembly is supported by the three cables shown. A turnbuckle at $D$ is tightened until it induces a tension $T$ in $CD$ of 1.2 kN. Express **T** as a vector. Does it make any difference in the result which coordinate system is used?

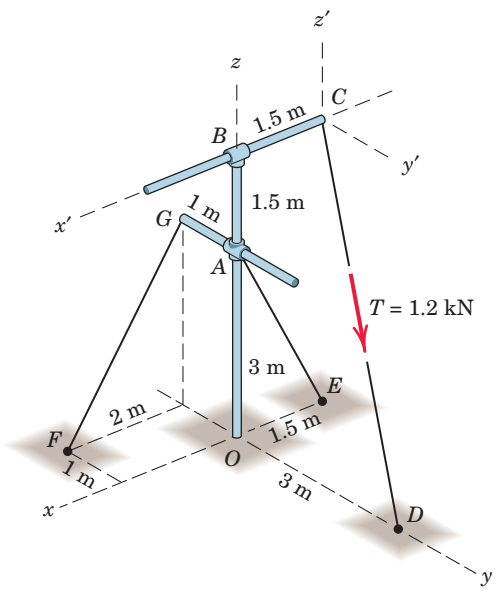


Problem 2/107

**2/108** Use the result cited for Prob. 2/107 and determine the magnitude $T_{GF}$ of the projection of **T** onto line $GF$.

## *Representative Problems*

**2/109** The force **F** has a magnitude of 500 lb and acts along the line $AM$, where $M$ is the midpoint of the vertical side $OB$ of the parallelepiped. Express **F** as its magnitude times the appropriate unit vector and determine its $x$-, $y$-, and $z$-scalar components.

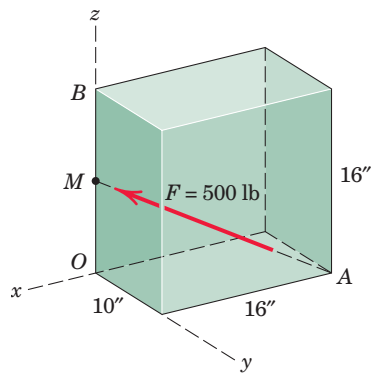


Problem 2/109

**2/110** The force **F** has a magnitude of 2 kN and is directed from $A$ to $B$. Calculate the projection $F_{CD}$ of **F** onto line $CD$ and determine the angle $\theta$ between **F** and $CD$.

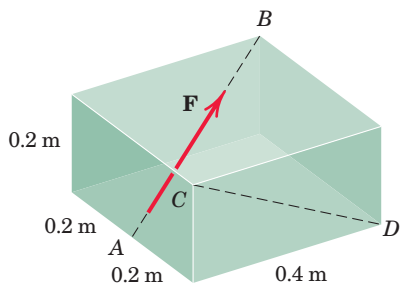


Problem 2/110

**2/111** The cable $BC$ carries a tension of 750 N. Write this tension as a force **T** acting on point $B$ in terms of the unit vectors **i**, **j**, and **k**. The elbow at $A$ forms a right angle.

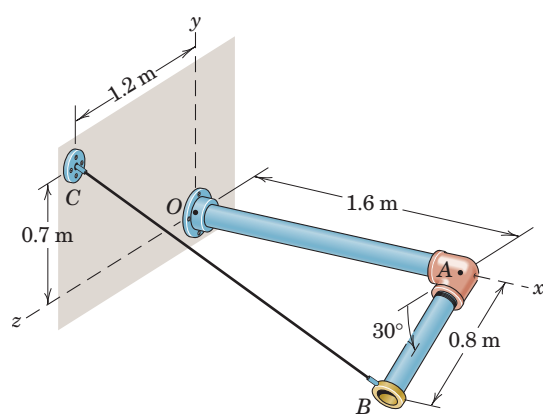


Problem 2/111

**2/112** The tension in the supporting cable $BC$ is 800 lb. Write the force which this cable exerts on the boom $OAB$ as a vector $\mathbf{T}$. Determine the angles $\theta_x$, $\theta_y$, and $\theta_z$ which the line of action of $\mathbf{T}$ forms with the positive $x$-, $y$-, and $z$-axes.

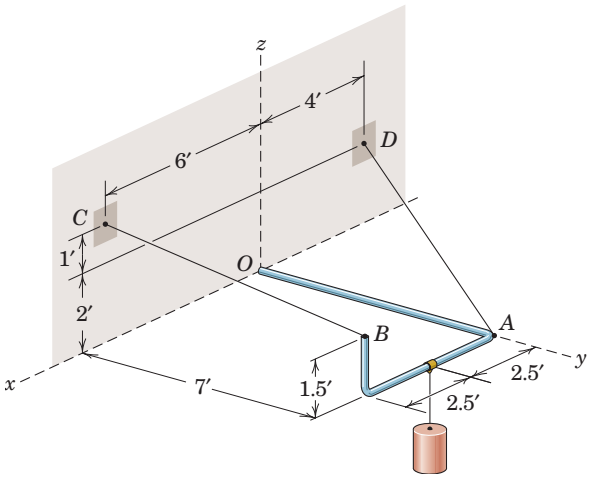


**Problem 2/112**

**2/113** Determine the angle $\theta$ between the 200-lb force and line $OC$.

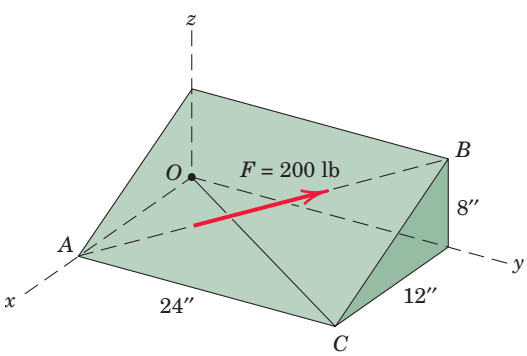


**Problem 2/113**

**2/114** The rectangular plate is supported by hinges along its side $BC$ and by the cable $AE$. If the cable tension is 300 N, determine the projection onto line $BC$ of the force exerted on the plate by the cable. Note that $E$ is the midpoint of the horizontal upper edge of the structural support.

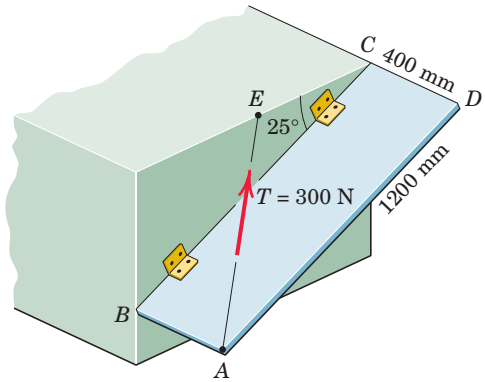


**Problem 2/114**

**2/115** An overhead crane is used to reposition the boxcar within a railroad car-repair shop. If the boxcar begins to move along the rails when the $x$-component of the cable tension reaches 600 lb, calculate the necessary tension $T$ in the cable. Determine the angle $\theta_{xy}$ between the cable and the vertical $x$-$y$ plane.

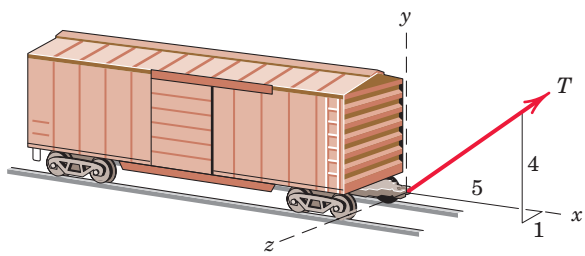


**Problem 2/115**

**2/116** The access door is held in the 30° open position by the chain $AB$. If the tension in the chain is 100 N, determine the projection of the tension force onto the diagonal axis $CD$ of the door.

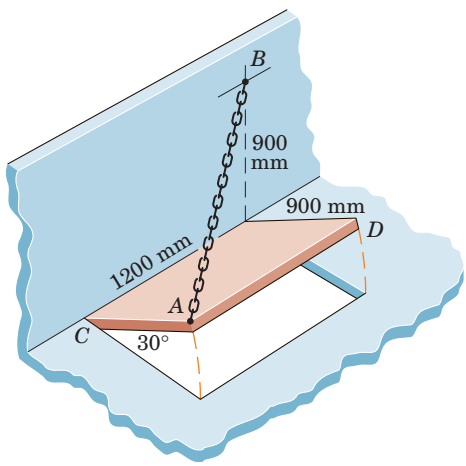


**Problem 2/116**

**2/117** The shafts and attached brackets are twisted in opposite directions to maintain a tension $T$ of 500 N in the wire joining $A$ and $B$. Express the tension, considered as a force acting on $A$, as a vector in the form of Eq. 2/12 and determine the projection of **T** onto the line $DC$.

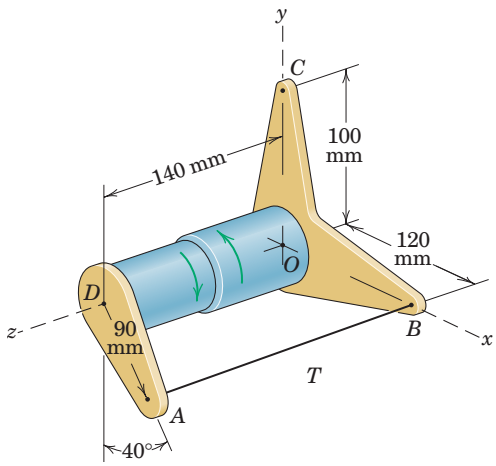


**Problem 2/117**

**▶2/118** A force **F** is applied to the surface of the sphere as shown. The angles $\theta$ and $\phi$ locate point $P$, and point $M$ is the midpoint of $ON$. Express **F** in vector form, using the given $x$-, $y$-, and $z$-coordinates.

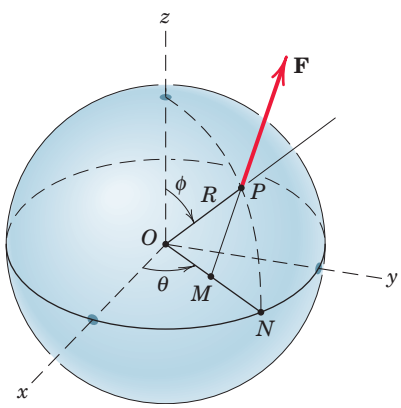


**Problem 2/118**

**▶2/119** The power line is strung from the power-pole arm at $A$ to point $B$ on the same horizontal plane. Because of the sag of the cable in the vertical plane, the cable makes an angle of 15° with the horizontal where it attaches to $A$. If the cable tension at $A$ is 200 lb, write **T** as a vector and determine the magnitude of its projection onto the $x$-$z$ plane.

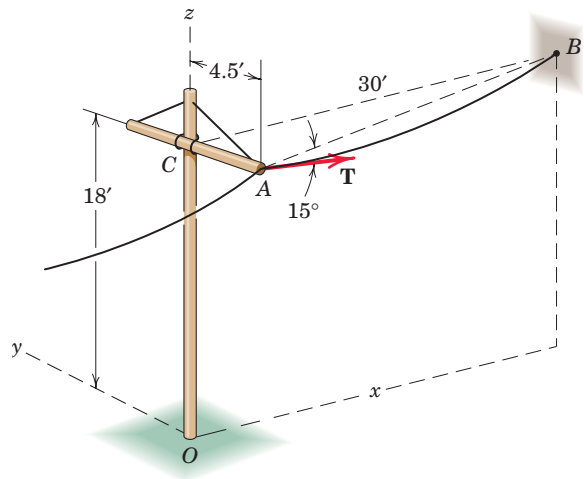


**Problem 2/119**

**▶2/120** Determine the $x$-, $y$-, and $z$-components of force **F** which acts on the tetrahedron as shown. The quantities $a$, $b$, $c$, and $F$ are known, and $M$ is the midpoint of edge $AB$.

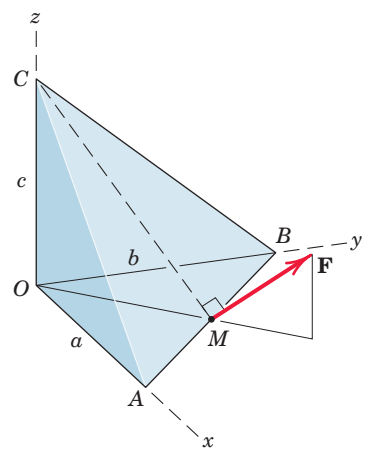


**Problem 2/120**

## 2/8 Moment and Couple

In two-dimensional analyses it is often convenient to determine a moment magnitude by scalar multiplication using the moment-arm rule. In three dimensions, however, the determination of the perpendicular distance between a point or line and the line of action of the force can be a tedious computation. A vector approach with cross-product multiplication then becomes advantageous.

### Moments in Three Dimensions

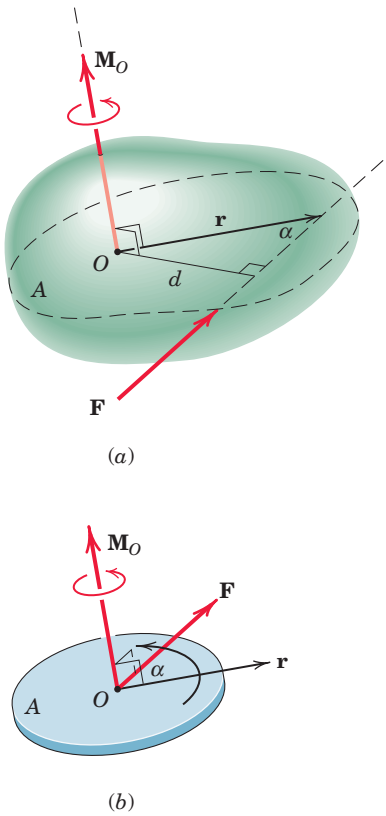


**Figure 2/21**

Consider a force $\mathbf{F}$ with a given line of action acting on a body, Fig. 2/21*a*, and any point $O$ not on this line. Point $O$ and the line of $\mathbf{F}$ establish a plane $A$. The moment $\mathbf{M}_O$ of $\mathbf{F}$ about an axis through $O$ normal to the plane has the magnitude $M_O = Fd$, where $d$ is the perpendicular distance from $O$ to the line of $\mathbf{F}$. This moment is also referred to as the moment of $\mathbf{F}$ about the *point* $O$.

The vector $\mathbf{M}_O$ is normal to the plane and is directed along the axis through $O$. We can describe both the magnitude and the direction of $\mathbf{M}_O$ by the vector cross-product relation introduced in Art. 2/4. (Refer to item 7 in Art. C/7 of Appendix C.) The vector $\mathbf{r}$ runs from $O$ to *any* point on the line of action of $\mathbf{F}$. As described in Art. 2/4, the cross product of $\mathbf{r}$ and $\mathbf{F}$ is written $\mathbf{r} \times \mathbf{F}$ and has the magnitude $(r \sin \alpha)F$, which is the same as $Fd$, the magnitude of $\mathbf{M}_O$.

The correct direction and sense of the moment are established by the right-hand rule, described previously in Arts. 2/4 and 2/5. Thus, with $\mathbf{r}$ and $\mathbf{F}$ treated as free vectors emanating from $O$, Fig. 2/21*b*, the thumb points in the direction of $\mathbf{M}_O$ if the fingers of the right hand curl in the direction of rotation from $\mathbf{r}$ to $\mathbf{F}$ through the angle $\alpha$. Therefore, we may write the moment of $\mathbf{F}$ about the axis through $O$ as

$$\mathbf{M}_O = \mathbf{r} \times \mathbf{F} \tag{2/14}$$

The order $\mathbf{r} \times \mathbf{F}$ of the vectors *must* be maintained because $\mathbf{F} \times \mathbf{r}$ would produce a vector with a sense opposite to that of $\mathbf{M}_O$; that is, $\mathbf{F} \times \mathbf{r} = -\mathbf{M}_O$.

### Evaluating the Cross Product

The cross-product expression for $\mathbf{M}_O$ may be written in the determinant form

$$\mathbf{M}_O = \begin{vmatrix} \mathbf{i} & \mathbf{j} & \mathbf{k} \\ r_x & r_y & r_z \\ F_x & F_y & F_z \end{vmatrix} \tag{2/15}$$

(Refer to item 7 in Art. C/7 of Appendix C if you are not already familiar with the determinant representation of the cross product.) Note the symmetry and order of the terms, and note that a *right-handed* coordinate system must be used. Expansion of the determinant gives

$$\mathbf{M}_O = (r_y F_z - r_z F_y)\mathbf{i} + (r_z F_x - r_x F_z)\mathbf{j} + (r_x F_y - r_y F_x)\mathbf{k}$$

To gain more confidence in the cross-product relationship, examine the three components of the moment of a force about a point as obtained from Fig. 2/22. This figure shows the three components of a force $\mathbf{F}$ acting at a point $A$ located relative to $O$ by the vector $\mathbf{r}$. The scalar magnitudes of the moments of these forces about the positive $x$-, $y$-, and $z$-axes through $O$ can be obtained from the moment-arm rule, and are

$$M_x = r_y F_z - r_z F_y \qquad M_y = r_z F_x - r_x F_z \qquad M_z = r_x F_y - r_y F_x$$

which agree with the respective terms in the determinant expansion for the cross product $\mathbf{r} \times \mathbf{F}$.

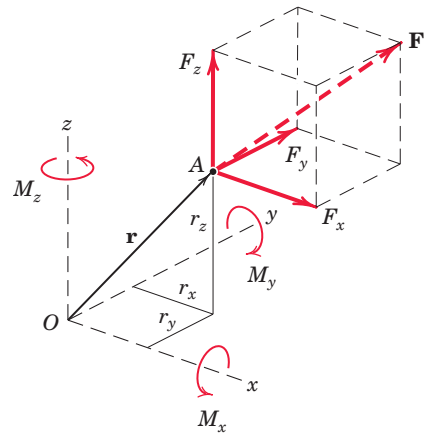


Figure 2/22

## Moment about an Arbitrary Axis

We can now obtain an expression for the moment $\mathbf{M}_\lambda$ of $\mathbf{F}$ about *any* axis $\lambda$ through $O$, as shown in Fig. 2/23. If $\mathbf{n}$ is a unit vector in the $\lambda$-direction, then we can use the dot-product expression for the component of a vector as described in Art. 2/7 to obtain $\mathbf{M}_O \cdot \mathbf{n}$, the component of $\mathbf{M}_O$ in the direction of $\lambda$. This scalar is the magnitude of the moment $\mathbf{M}_\lambda$ of $\mathbf{F}$ about $\lambda$.

To obtain the vector expression for the moment $\mathbf{M}_\lambda$ of $\mathbf{F}$ about $\lambda$, multiply the magnitude by the directional unit vector $\mathbf{n}$ to obtain

$$\mathbf{M}_\lambda = (\mathbf{r} \times \mathbf{F} \cdot \mathbf{n})\mathbf{n} \tag{2/16}$$

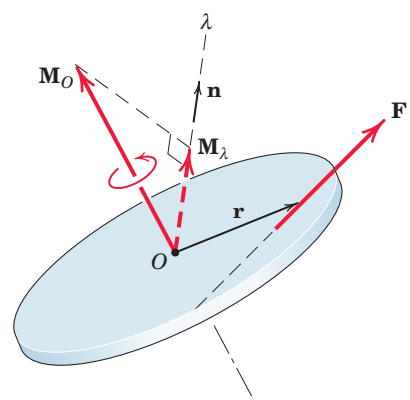


Figure 2/23

where $\mathbf{r} \times \mathbf{F}$ replaces $\mathbf{M}_O$. The expression $\mathbf{r} \times \mathbf{F} \cdot \mathbf{n}$ is known as a *triple scalar product* (see item 8 in Art. C/7, Appendix C). It need not be written $(\mathbf{r} \times \mathbf{F}) \cdot \mathbf{n}$ because a cross product cannot be formed by a vector and a scalar. Thus, the association $\mathbf{r} \times (\mathbf{F} \cdot \mathbf{n})$ would have no meaning.

The triple scalar product may be represented by the determinant

$$|\mathbf{M}_\lambda| = M_\lambda = \begin{vmatrix} r_x & r_y & r_z \\ F_x & F_y & F_z \\ \alpha & \beta & \gamma \end{vmatrix} \tag{2/17}$$

where $\alpha$, $\beta$, $\gamma$ are the direction cosines of the unit vector $\mathbf{n}$.

## Varignon's Theorem in Three Dimensions

In Art. 2/4 we introduced Varignon's theorem in two dimensions. The theorem is easily extended to three dimensions. Figure 2/24 shows a system of concurrent forces $\mathbf{F}_1$, $\mathbf{F}_2$, $\mathbf{F}_3$, . . . . The sum of the moments about $O$ of these forces is

$$\begin{aligned} \mathbf{r} \times \mathbf{F}_1 + \mathbf{r} \times \mathbf{F}_2 + \mathbf{r} \times \mathbf{F}_3 + \cdots &= \mathbf{r} \times (\mathbf{F}_1 + \mathbf{F}_2 + \mathbf{F}_3 + \cdots) \\ &= \mathbf{r} \times \Sigma\mathbf{F} \end{aligned}$$

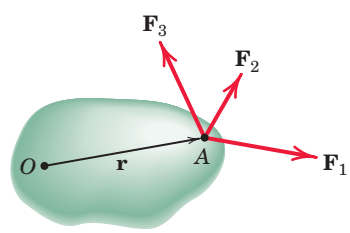


Figure 2/24

where we have used the distributive law for cross products. Using the symbol $\mathbf{M}_O$ to represent the sum of the moments on the left side of the above equation, we have

$$\mathbf{M}_O = \Sigma(\mathbf{r} \times \mathbf{F}) = \mathbf{r} \times \mathbf{R} \tag{2/18}$$

This equation states that the sum of the moments of a system of concurrent forces about a given point equals the moment of their sum about the same point. As mentioned in Art. 2/4, this principle has many applications in mechanics.

## Couples in Three Dimensions

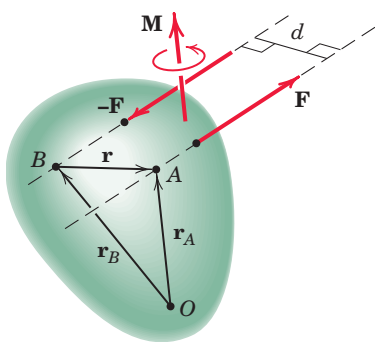


Figure 2/25

The concept of the couple was introduced in Art. 2/5 and is easily extended to three dimensions. Figure 2/25 shows two equal and opposite forces $\mathbf{F}$ and $-\mathbf{F}$ acting on a body. The vector $\mathbf{r}$ runs from *any* point $B$ on the line of action of $-\mathbf{F}$ to *any* point $A$ on the line of action of $\mathbf{F}$. Points $A$ and $B$ are located by position vectors $\mathbf{r}_A$ and $\mathbf{r}_B$ from *any* point $O$. The combined moment of the two forces about $O$ is

$$\mathbf{M} = \mathbf{r}_A \times \mathbf{F} + \mathbf{r}_B \times (-\mathbf{F}) = (\mathbf{r}_A - \mathbf{r}_B) \times \mathbf{F}$$

However, $\mathbf{r}_A - \mathbf{r}_B = \mathbf{r}$, so that all reference to the moment center $O$ disappears, and the moment of the couple becomes

$$\mathbf{M} = \mathbf{r} \times \mathbf{F} \tag{2/19}$$

Thus, the moment of a couple is the *same about all points*. The magnitude of $\mathbf{M}$ is $M = Fd$, where $d$ is the perpendicular distance between the lines of action of the two forces, as described in Art. 2/5.

The moment of a couple is a *free vector*, whereas the moment of a force about a point (which is also the moment about a defined axis through the point) is a *sliding vector* whose direction is along the axis through the point. As in the case of two dimensions, a couple tends to produce a pure rotation of the body about an axis normal to the plane of the forces which constitute the couple.

Couple vectors obey all of the rules which govern vector quantities. Thus, in Fig. 2/26 the couple vector $\mathbf{M}_1$ due to $\mathbf{F}_1$ and $-\mathbf{F}_1$ may be added

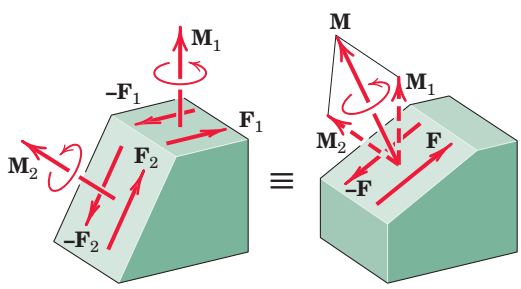


Figure 2/26

as shown to the couple vector $\mathbf{M}_2$ due to $\mathbf{F}_2$ and $-\mathbf{F}_2$ to produce the couple $\mathbf{M}$, which, in turn, can be produced by $\mathbf{F}$ and $-\mathbf{F}$.

In Art. 2/5 we learned how to replace a force by its equivalent force–couple system. You should also be able to carry out this replacement in three dimensions. The procedure is represented in Fig. 2/27, where the force $\mathbf{F}$ acting on a rigid body at point $A$ is replaced by an equal force at point $B$ and the couple $\mathbf{M} = \mathbf{r} \times \mathbf{F}$. By adding the equal and opposite forces $\mathbf{F}$ and $-\mathbf{F}$ at $B$, we obtain the couple composed of $-\mathbf{F}$ and the original $\mathbf{F}$. Thus, we see that the couple vector is simply the moment of the original force about the point to which the force is being moved. We emphasize that $\mathbf{r}$ is a vector which runs from $B$ to *any* point on the line of action of the original force passing through $A$.

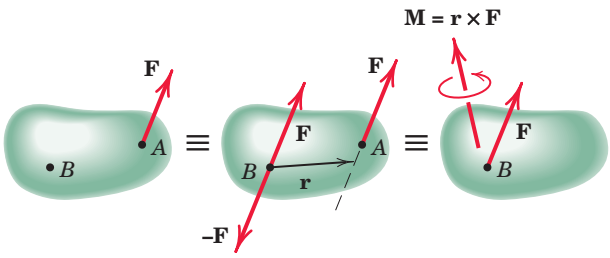


**Figure 2/27**

© Mark Hunt/Index Stock/Age Fotostock America, Inc.

**The three-dimensionality of the cable system on the Leonard P. Zakim Bunker Hill Bridge is evident in this view.**

## SAMPLE PROBLEM 2/11

Determine the moment of force **F** about point $O$ ($a$) by inspection and ($b$) by the formal cross-product definition $\mathbf{M}_O = \mathbf{r} \times \mathbf{F}$.

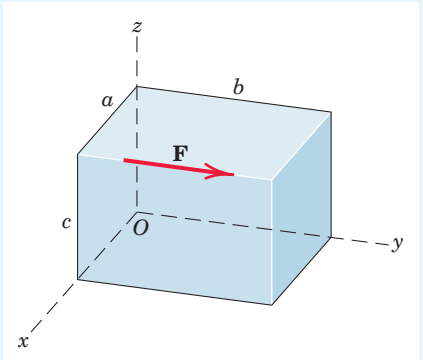


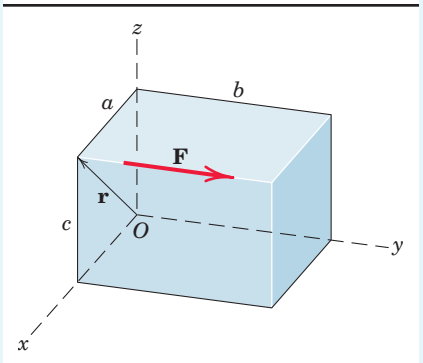


***Solution.*** ($a$) Because **F** is parallel to the $y$-axis, **F** has no moment about that axis. It should be clear that the moment arm from the $x$-axis to the line of action of **F** is $c$ and that the moment of **F** about the $x$-axis is negative. Similarly, the moment arm from the $z$-axis to the line of action of **F** is $a$ and the moment of **F** about the $z$-axis is positive. So we have

$$\mathbf{M}_O = -cF\mathbf{i} + aF\mathbf{k} = F(-c\mathbf{i} + a\mathbf{k}) \qquad \textit{Ans.}$$

($b$) Formally,

1 $$\mathbf{M}_O = \mathbf{r} \times \mathbf{F} = (a\mathbf{i} + c\mathbf{k}) \times F\mathbf{j} = aF\mathbf{k} - cF\mathbf{i}$$

$$= F(-c\mathbf{i} + a\mathbf{k}) \qquad \textit{Ans.}$$

### Helpful Hint

1 Again we stress that **r** runs *from* the moment center *to* the line of action of **F**. Another permissible, but less convenient, position vector is $\mathbf{r} = a\mathbf{i} + b\mathbf{j} + c\mathbf{k}$.

## SAMPLE PROBLEM 2/12

The turnbuckle is tightened until the tension in cable $AB$ is 2.4 kN. Determine the moment about point $O$ of the cable force acting on point $A$ and the magnitude of this moment.

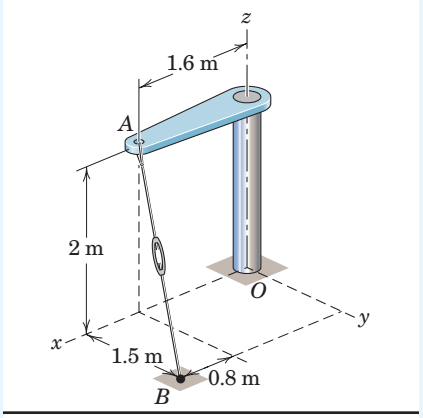


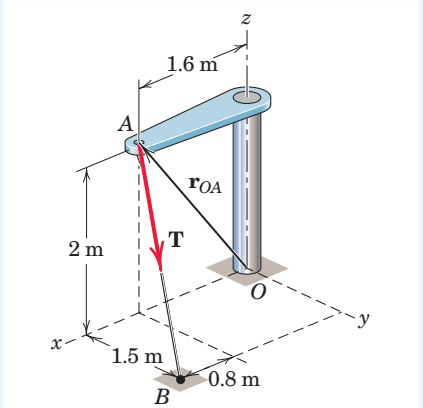


***Solution.*** We begin by writing the described force as a vector.

$$\mathbf{T} = T\mathbf{n}_{AB} = 2.4\left[\frac{0.8\mathbf{i} + 1.5\mathbf{j} - 2\mathbf{k}}{\sqrt{0.8^2 + 1.5^2 + 2^2}}\right]$$

$$= 0.731\mathbf{i} + 1.371\mathbf{j} - 1.829\mathbf{k} \text{ kN}$$

The moment of this force about point $O$ is

1 $$\mathbf{M}_O = \mathbf{r}_{OA} \times \mathbf{T} = (1.6\mathbf{i} + 2\mathbf{k}) \times (0.731\mathbf{i} + 1.371\mathbf{j} - 1.829\mathbf{k})$$

$$= -2.74\mathbf{i} + 4.39\mathbf{j} + 2.19\mathbf{k} \text{ kN}\cdot\text{m} \qquad \textit{Ans.}$$

This vector has a magnitude

$$M_O = \sqrt{2.74^2 + 4.39^2 + 2.19^2} = 5.62 \text{ kN}\cdot\text{m} \qquad \textit{Ans.}$$

### Helpful Hint

1 The student should verify by inspection the signs of the moment components.

## SAMPLE PROBLEM 2/13

A tension **T** of magnitude 10 kN is applied to the cable attached to the top $A$ of the rigid mast and secured to the ground at $B$. Determine the moment $M_z$ of **T** about the $z$-axis passing through the base $O$.

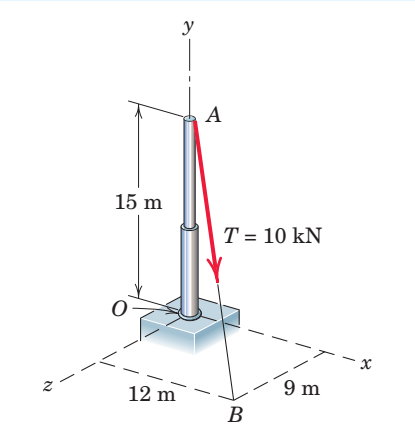


***Solution (a).*** The required moment may be obtained by finding the component along the $z$-axis of the moment $\mathbf{M}_O$ of **T** about point $O$. The vector $\mathbf{M}_O$ is normal to the plane defined by **T** and point $O$, as shown in the accompanying figure. In the use of Eq. 2/14 to find $\mathbf{M}_O$, the vector **r** is any vector from point $O$ to the line of action of **T**. The simplest choice is the vector from $O$ to $A$, which is written as $\mathbf{r} = 15\mathbf{j}$ m. The vector expression for **T** is

1

$$\mathbf{T} = T\mathbf{n}_{AB} = 10\left[\frac{12\mathbf{i} - 15\mathbf{j} + 9\mathbf{k}}{\sqrt{(12)^2 + (-15)^2 + (9)^2}}\right]$$

$$= 10(0.566\mathbf{i} - 0.707\mathbf{j} + 0.424\mathbf{k})\ \text{kN}$$

From Eq. 2/14,

$$[\mathbf{M}_O = \mathbf{r} \times \mathbf{F}] \qquad \mathbf{M}_O = 15\mathbf{j} \times 10(0.566\mathbf{i} - 0.707\mathbf{j} + 0.424\mathbf{k})$$

$$= 150(-0.566\mathbf{k} + 0.424\mathbf{i})\ \text{kN}\cdot\text{m}$$

The value $M_z$ of the desired moment is the scalar component of $\mathbf{M}_O$ in the $z$-direction or $M_z = \mathbf{M}_O \cdot \mathbf{k}$. Therefore,

$$M_z = 150(-0.566\mathbf{k} + 0.424\mathbf{i})\cdot\mathbf{k} = -84.9\ \text{kN}\cdot\text{m} \qquad \textit{Ans.}$$

2 The minus sign indicates that the vector $\mathbf{M}_z$ is in the negative $z$-direction. Expressed as a vector, the moment is $\mathbf{M}_z = -84.9\mathbf{k}$ kN·m.

***Solution (b).*** The force of magnitude $T$ is resolved into components $T_z$ and $T_{xy}$ in the $x$-$y$ plane. Since $T_z$ is parallel to the $z$-axis, it can exert no moment about this axis. The moment $M_z$ is, then, due only to $T_{xy}$ and is $M_z = T_{xy}d$, where $d$ is the perpendicular distance from $T_{xy}$ to $O$. The cosine of the angle between $T$ and $T_{xy}$ is $\sqrt{15^2 + 12^2} / \sqrt{15^2 + 12^2 + 9^2} = 0.906$, and therefore,

3

$$T_{xy} = 10(0.906) = 9.06\ \text{kN}$$

The moment arm $d$ equals $\overline{OA}$ multiplied by the sine of the angle between $T_{xy}$ and $OA$, or

$$d = 15\frac{12}{\sqrt{12^2 + 15^2}} = 9.37\ \text{m}$$

Hence, the moment of **T** about the $z$-axis has the magnitude

$$M_z = 9.06(9.37) = 84.9\ \text{kN}\cdot\text{m} \qquad \textit{Ans.}$$

and is clockwise when viewed in the $x$-$y$ plane.

***Solution (c).*** The component $T_{xy}$ is further resolved into its components $T_x$ and $T_y$. It is clear that $T_y$ exerts no moment about the $z$-axis since it passes through it, so that the required moment is due to $T_x$ alone. The direction cosine of **T** with respect to the $x$-axis is $12/\sqrt{9^2 + 12^2 + 15^2} = 0.566$ so that $T_x = 10(0.566) = 5.66$ kN. Thus,

$$M_z = 5.66(15) = 84.9\ \text{kN}\cdot\text{m} \qquad \textit{Ans.}$$

### Helpful Hints

1 We could also use the vector from $O$ to $B$ for **r** and obtain the same result, but using vector $OA$ is simpler.

2 It is always helpful to accompany your vector operations with a sketch of the vectors so as to retain a clear picture of the geometry of the problem.

3 Sketch the $x$-$y$ view of the problem and show $d$.

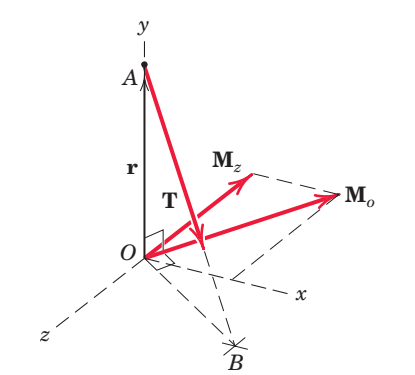


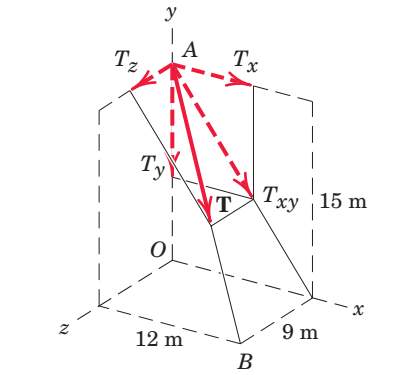

## SAMPLE PROBLEM 2/14

Determine the magnitude and direction of the couple **M** which will replace the two given couples and still produce the same external effect on the block. Specify the two forces **F** and −**F**, applied in the two faces of the block parallel to the *y-z* plane, which may replace the four given forces. The 30-N forces act parallel to the *y-z* plane.

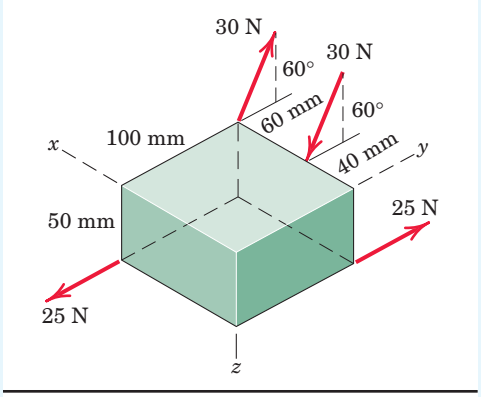


**Solution.** The couple due to the 30-N forces has the magnitude $M_1 = 30(0.06) = 1.80$ N·m. The direction of $\mathbf{M}_1$ is normal to the plane defined by the two forces, and the sense, shown in the figure, is established by the right-hand convention. The couple due to the 25-N forces has the magnitude $M_2 = 25(0.10) = 2.50$ N·m with the direction and sense shown in the same figure. The two couple vectors combine to give the components

$$M_y = 1.80 \sin 60° = 1.559 \text{ N·m}$$

$$M_z = -2.50 + 1.80 \cos 60° = -1.600 \text{ N·m}$$

1 Thus, $$M = \sqrt{(1.559)^2 + (-1.600)^2} = 2.23 \text{ N·m} \qquad \textit{Ans.}$$

with $$\theta = \tan^{-1}\frac{1.559}{1.600} = \tan^{-1} 0.974 = 44.3° \qquad \textit{Ans.}$$

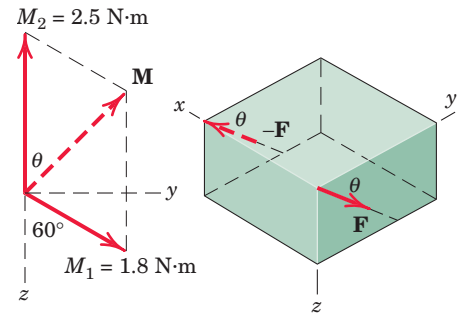


The forces **F** and −**F** lie in a plane normal to the couple **M**, and their moment arm as seen from the right-hand figure is 100 mm. Thus, each force has the magnitude

$$[M = Fd] \qquad F = \frac{2.23}{0.10} = 22.3 \text{ N} \qquad \textit{Ans.}$$

and the direction $\theta = 44.3°$.

**Helpful Hint**

1 Bear in mind that the couple vectors are *free vectors* and therefore have no unique lines of action.

## SAMPLE PROBLEM 2/15

A force of 40 lb is applied at *A* to the handle of the control lever which is attached to the fixed shaft *OB*. In determining the effect of the force on the shaft at a cross section such as that at *O*, we may replace the force by an equivalent force at *O* and a couple. Describe this couple as a vector **M**.

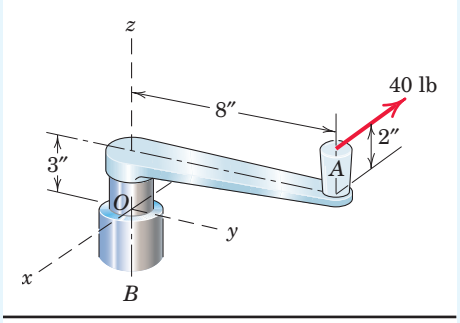


**Solution.** The couple may be expressed in vector notation as $\mathbf{M} = \mathbf{r} \times \mathbf{F}$, where $\mathbf{r} = \overrightarrow{OA} = 8\mathbf{j} + 5\mathbf{k}$ in. and $\mathbf{F} = -40\mathbf{i}$ lb. Thus,

$$\mathbf{M} = (8\mathbf{j} + 5\mathbf{k}) \times (-40\mathbf{i}) = -200\mathbf{j} + 320\mathbf{k} \text{ lb-in.}$$

Alternatively we see that moving the 40-lb force through a distance $d = \sqrt{5^2 + 8^2} = 9.43$ in. to a parallel position through *O* requires the addition of a couple **M** whose magnitude is

$$M = Fd = 40(9.43) = 377 \text{ lb-in.} \qquad \textit{Ans.}$$

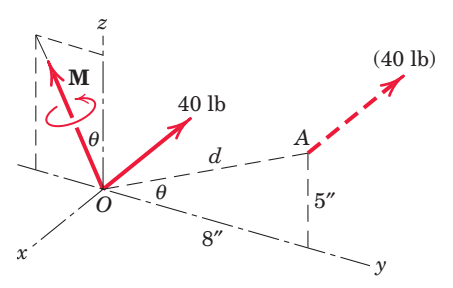


The couple vector is perpendicular to the plane in which the force is shifted, and its sense is that of the moment of the given force about *O*. The direction of **M** in the *y-z* plane is given by

$$\theta = \tan^{-1}\frac{5}{8} = 32.0° \qquad \textit{Ans.}$$

# PROBLEMS

## *Introductory Problems*

**2/121** The three forces act perpendicular to the rectangular plate as shown. Determine the moments $\mathbf{M}_1$ of $\mathbf{F}_1$, $\mathbf{M}_2$ of $\mathbf{F}_2$, and $\mathbf{M}_3$ of $\mathbf{F}_3$, all about point $O$.

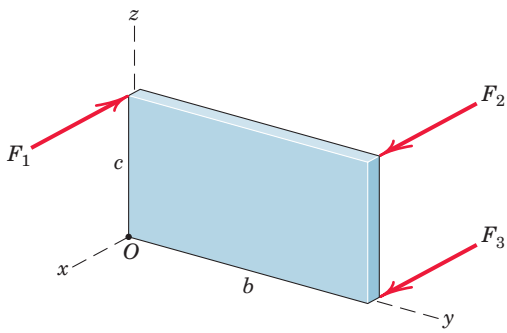


**Problem 2/121**

**2/122** The weight of the printer is 80 lb with center of gravity at point $G$. Determine the moment $\mathbf{M}_O$ of this weight about point $O$ on the horizontal table top. Find the magnitude of $\mathbf{M}_O$.

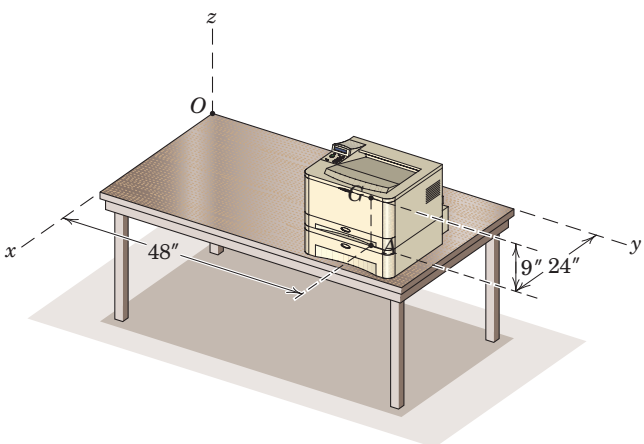


**Problem 2/122**

**2/123** Determine the moment of force $\mathbf{F}$ about point $O$, about point $A$, and about line $OB$.

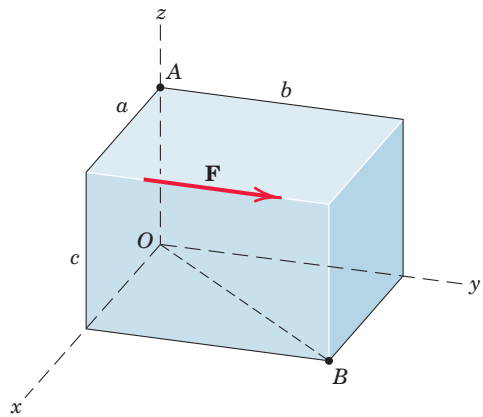


**Problem 2/123**

**2/124** The steel H-beam is being designed as a column to support the two vertical forces shown. Replace these forces by a single equivalent force along the vertical centerline of the column and a couple $\mathbf{M}$.

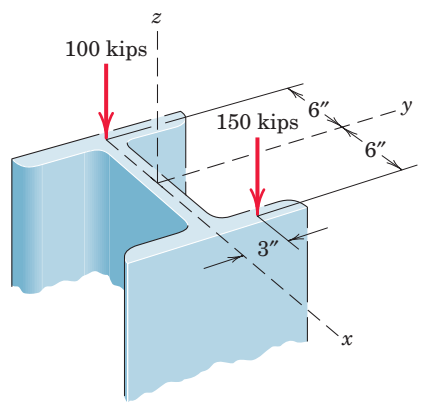


**Problem 2/124**

**2/125** A right-angle bracket is welded to the flange of the I-beam to support the 9000-lb force, applied parallel to the axis of the beam, and the 5000-lb force, applied in the end plane of the beam. In analyzing the capacity of the beam to withstand the applied loads in the design stage, it is convenient to replace the forces by an equivalent force at $O$ and a corresponding couple $\mathbf{M}$. Determine the $x$-, $y$-, and $z$-components of $\mathbf{M}$.

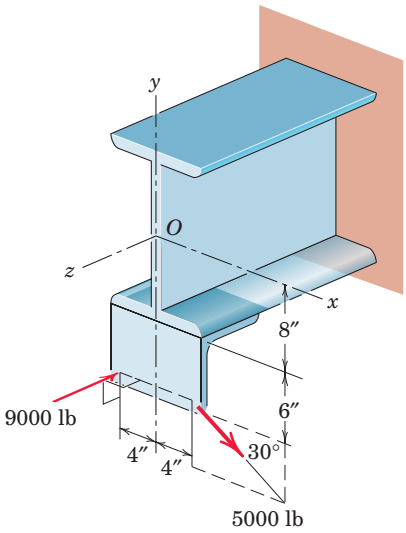


**Problem 2/125**

**2/126** The turnbuckle is tightened until the tension in cable $AB$ is 1.2 kN. Calculate the magnitude of the moment about point $O$ of the force acting on point $A$.

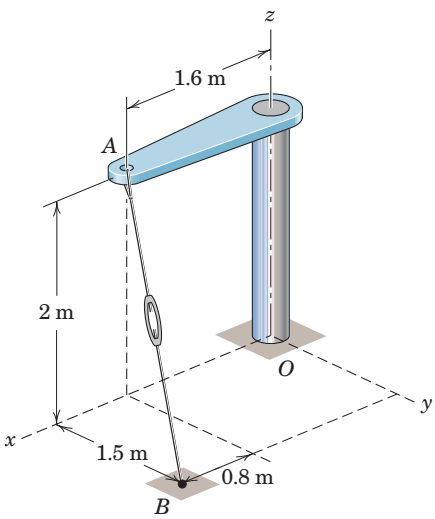


**Problem 2/126**

**2/127** The two forces acting on the handles of the pipe wrenches constitute a couple $\mathbf{M}$. Express the couple as a vector.

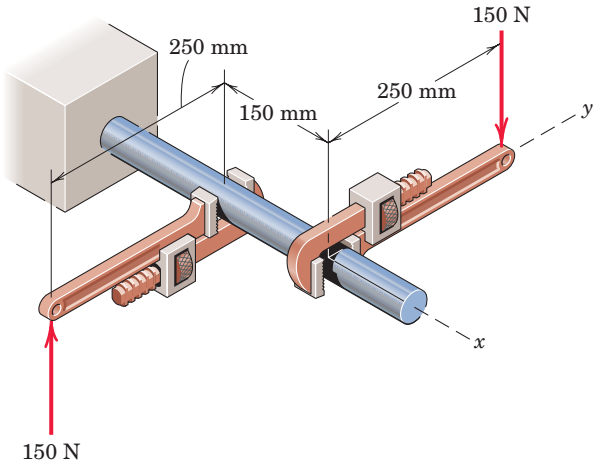


**Problem 2/127**

**2/128** The body is composed of slender bar which has a mass $\rho$ per unit of length. Determine the moment of the weight of the body about point $O$.

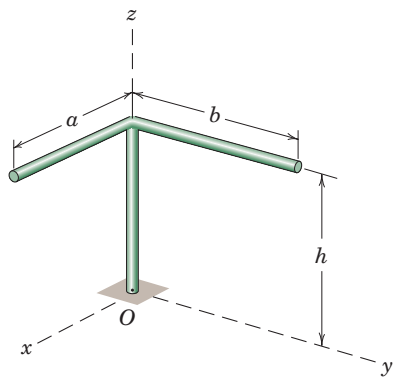


**Problem 2/128**

**2/129** In opening a door which is equipped with a heavy-duty return mechanism, a person exerts a force **P** of magnitude 6 lb as shown. Force **P** and the normal $n$ to the face of the door lie in a vertical plane. Compute the moment of **P** about the $z$-axis.

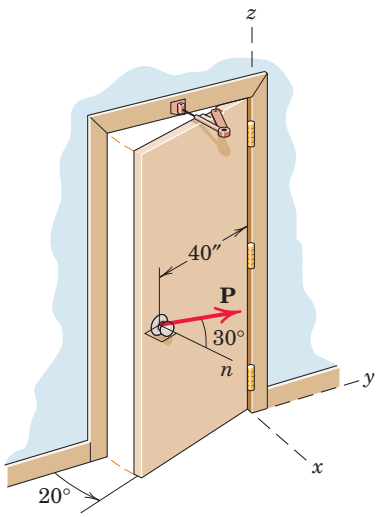


**Problem 2/129**

**2/130** A 50-lb force is applied to the control pedal as shown. The force lies in a plane parallel to the $x$-$z$ plane and is perpendicular to $BC$. Determine the moments of this force about point $O$ and about the shaft $OA$.

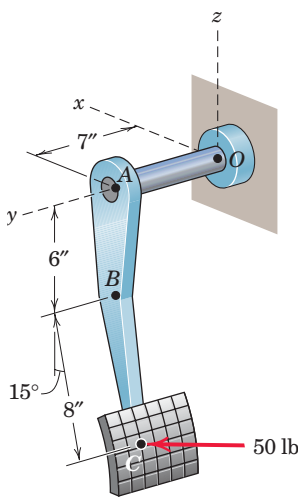


**Problem 2/130**

**2/131** The bent bar has a mass $\rho$ per unit of length. Determine the moment of the weight of the bar about point $O$.

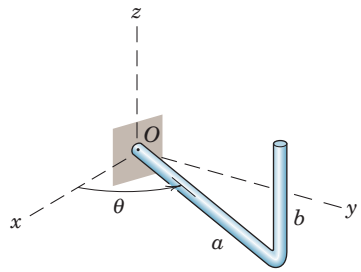


**Problem 2/131**

**2/132** A helicopter is shown here with certain three-dimensional geometry given. During a ground test, a 400-N aerodynamic force is applied to the tail rotor at $P$ as shown. Determine the moment of this force about point $O$ of the airframe.

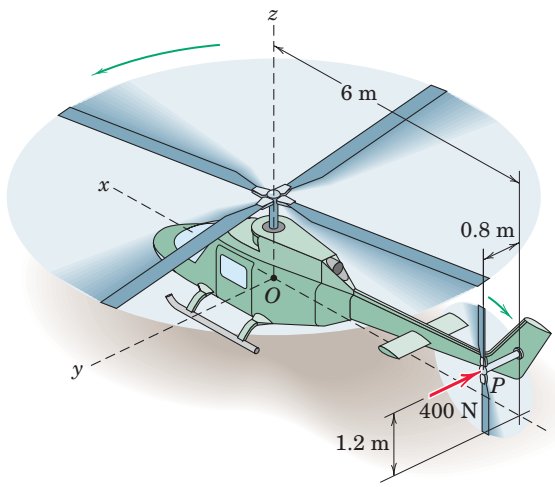


**Problem 2/132**

## Representative Problems

**2/133** A 300-N force is applied to the handle of the winch as shown. The force lies in a plane which is parallel to the $y$-$z$ plane and is perpendicular to line $AB$ of the handle. Determine the moments of this force about point $O$ and about the $x$-axis.

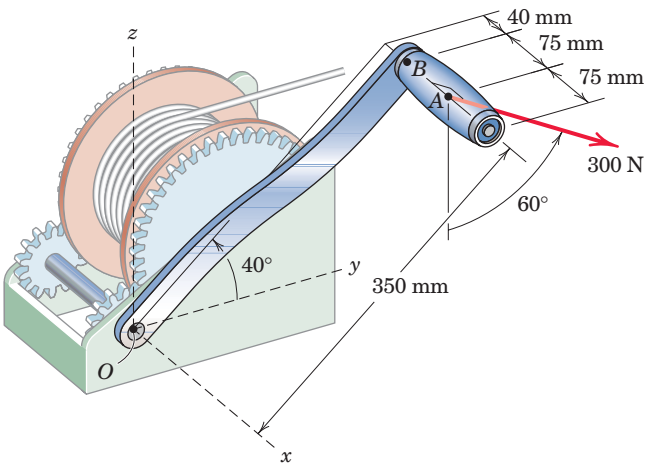


Problem 2/133

**2/134** The right-angle pipe $OAB$ of Prob. 2/111 is shown again here. Replace the 750-N tensile force which the cable exerts on point $B$ by a force–couple system at point $O$.

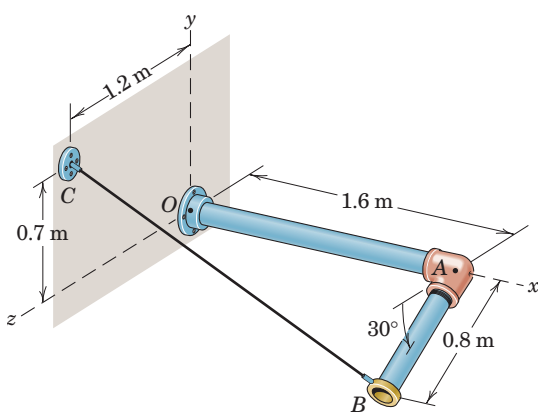


Problem 2/134

**2/135** Two 1.2-lb thrusters on the nonrotating satellite are simultaneously fired as shown. Compute the moment associated with this couple and state about which satellite axes rotations will begin to occur.

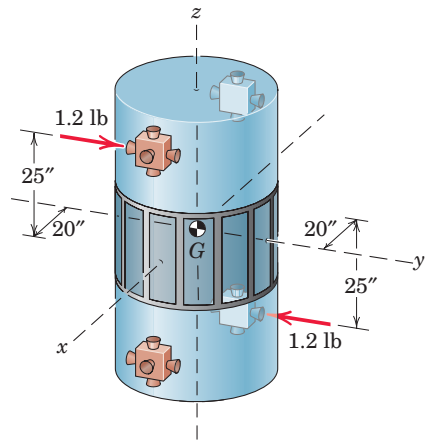


Problem 2/135

**2/136** A space shuttle orbiter is subjected to thrusts from five of the engines of its reaction control system. Four of the thrusts are shown in the figure; the fifth is an 850-N upward thrust at the right rear, symmetric to the 850-N thrust shown on the left rear. Compute the moment of these forces about point $G$ and show that the forces have the same moment about all points.

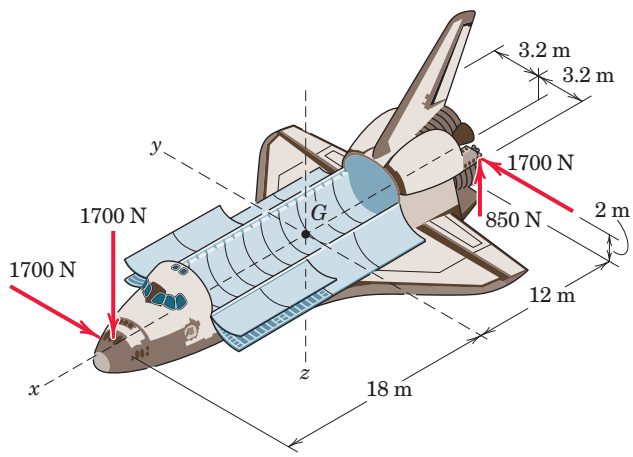


Problem 2/136

**2/137** The specialty wrench shown in the figure is designed for access to the hold-down bolt on certain automobile distributors. For the configuration shown where the wrench lies in a vertical plane and a horizontal 200-N force is applied at $A$ perpendicular to the handle, calculate the moment $\mathbf{M}_O$ applied to the bolt at $O$. For what value of the distance $d$ would the $z$-component of $\mathbf{M}_O$ be zero?

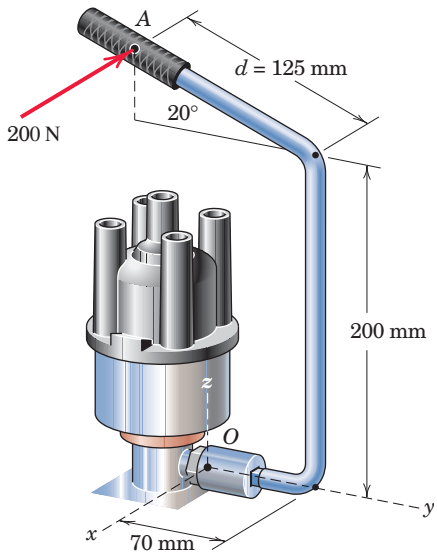


**Problem 2/137**

**2/138** A 50-N horizontal force is applied to the handle of the industrial water valve as shown. The force is perpendicular to the vertical plane containing line *OA* of the handle. Determine the equivalent force–couple system at point *O*.

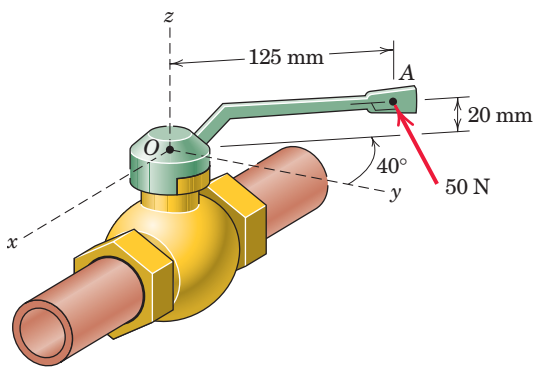


**Problem 2/138**

**2/139** If the magnitude of the moment of **F** about line *CD* is 50 N·m, determine the magnitude of **F**.

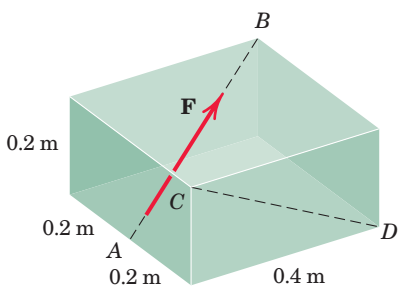


**Problem 2/139**

**2/140** Replace the two forces which act on the 3-m cube by an equivalent single force **F** at *A* and a couple **M**.

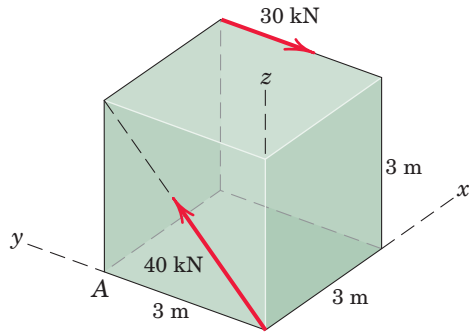


**Problem 2/140**

**2/141** Using the principles to be developed in Chapter 3 on equilibrium, one can determine that the tension in cable *AB* is 143.4 N. Determine the moment about the *x*-axis of this tension force acting on point *A*. Compare your result with the moment of the weight *W* of the 15-kg uniform plate about the *x*-axis. What is the moment of the tension force acting at *A* about line *OB*?

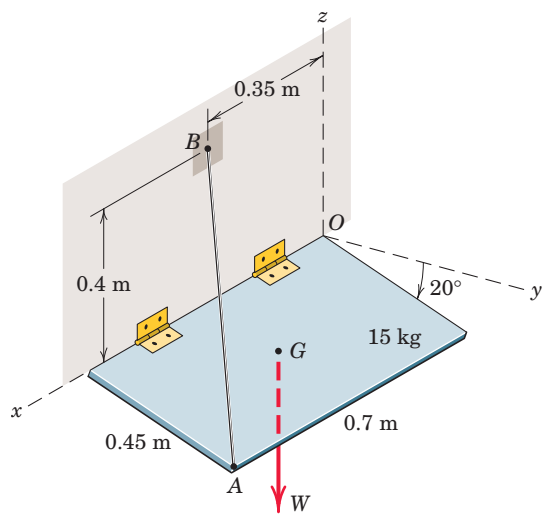


**Problem 2/141**

**2/142** The rigid pole and cross-arm assembly of Prob. 2/107 is shown again here. Determine the vector expression for the moment of the 1.2-kN tension (*a*) about point *O* and (*b*) about the pole *z*-axis. Find each moment in two different ways.

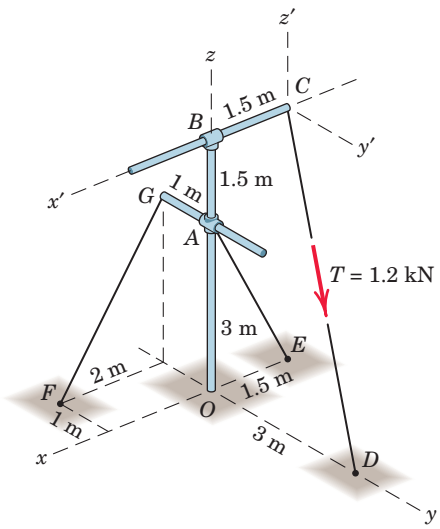


**Problem 2/142**

**2/143** A 1.8-lb vertical force is applied to the knob of the window-opener mechanism when the crank *BC* is horizontal. Determine the moment of the force about point *A* and about line *AB*.

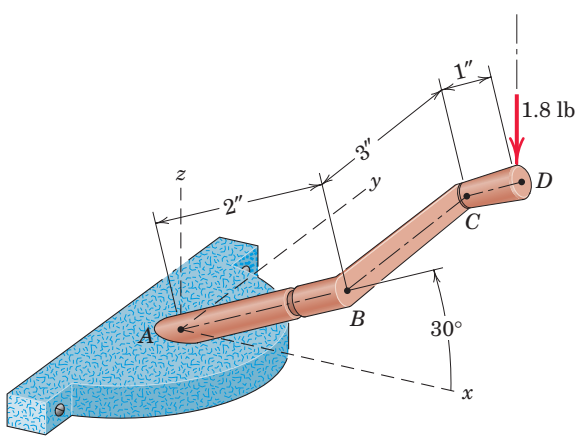


**Problem 2/143**

**2/144** The special-purpose milling cutter is subjected to the force of 1200 N and a couple of 240 N·m as shown. Determine the moment of this system about point *O*.

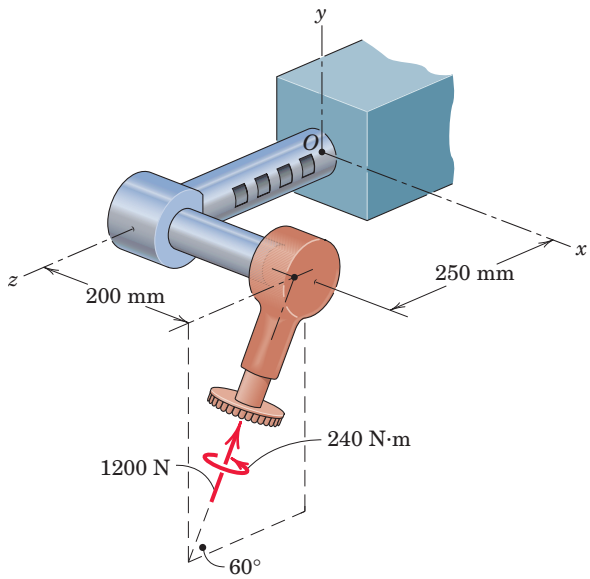


**Problem 2/144**

**2/145** The 180-lb force is applied at point *A* of the bracket. Determine the moments of this force about point *B*, about point *C*, and about the line *BC*.

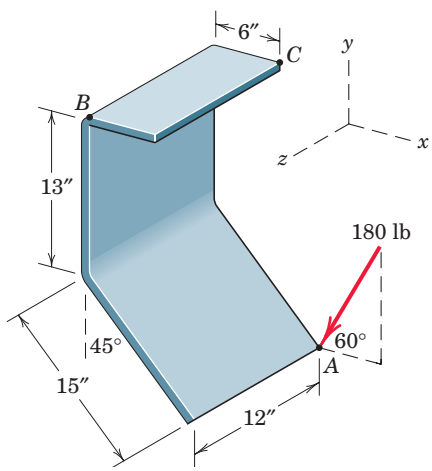


**Problem 2/145**

**2/146** For the instant shown when the crankpins of a two-cylinder engine pass through the horizontal $y$-$z$ plane, connecting rod $A$ is under a compression of 1.8 kN and rod $B$ is under a compression of 0.8 kN. Determine the moment (torque) exerted by the two rods about the crank axis $z$. For design purposes it is also necessary to have the vector expression for the moments of the two forces about one of the main ball bearings at $O$.

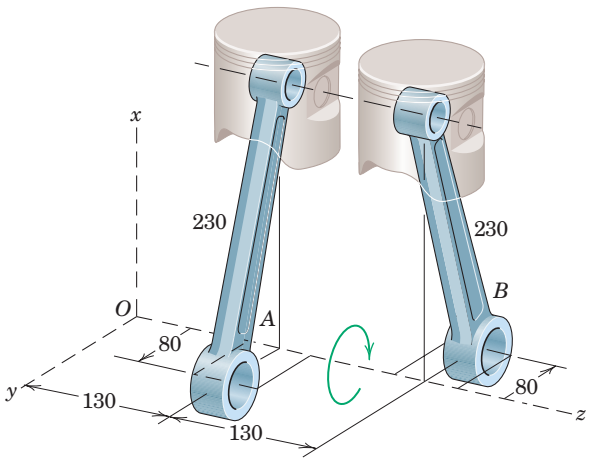


Dimensions in millimeters

**Problem 2/146**

**2/147** The force $F$ acts along an element of the right circular cone as shown. Determine the equivalent force–couple system at point $O$.

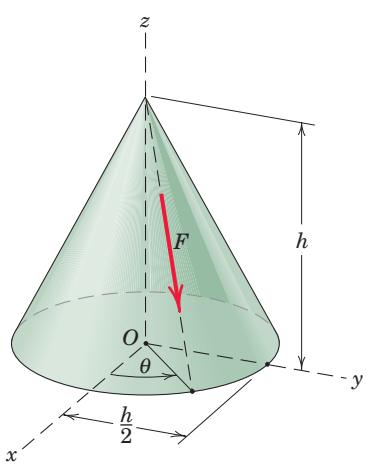


**Problem 2/147**

**▶2/148** The threading die is screwed onto the end of the fixed pipe, which is bent through an angle of 20°. Replace the two forces by an equivalent force at $O$ and a couple $\mathbf{M}$. Find $\mathbf{M}$ and calculate the magnitude $M'$ of the moment which tends to screw the pipe into the fixed block about its angled axis through $O$.

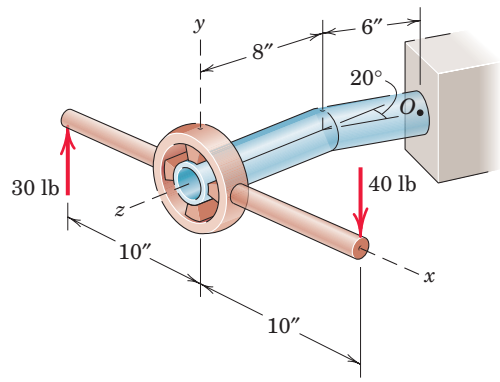


**Problem 2/148**

## 2/9 Resultants

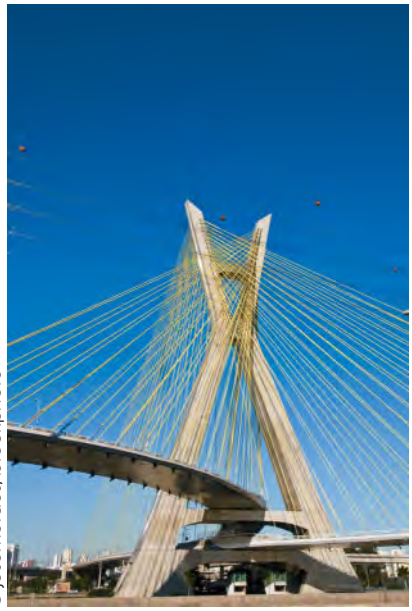

© josemoraes/iStockphoto

**The cables of this cable-stayed bridge exert a three-dimensional system of concentrated forces on the bridge tower.**

In Art. 2/6 we defined the resultant as the simplest force combination which can replace a given system of forces without altering the external effect on the rigid body on which the forces act. We found the magnitude and direction of the resultant force for the two-dimensional force system by a vector summation of forces, Eq. 2/9, and we located the line of action of the resultant force by applying the principle of moments, Eq. 2/10. These same principles can be extended to three dimensions.

In the previous article we showed that a force could be moved to a parallel position by adding a corresponding couple. Thus, for the system of forces $\mathbf{F}_1$, $\mathbf{F}_2$, $\mathbf{F}_3$ . . . acting on a rigid body in Fig. 2/28*a*, we may move each of them in turn to the arbitrary point $O$, provided we also introduce a couple for each force transferred. Thus, for example, we may move force $\mathbf{F}_1$ to $O$, provided we introduce the couple $\mathbf{M}_1 = \mathbf{r}_1 \times \mathbf{F}_1$, where $\mathbf{r}_1$ is a vector from $O$ to any point on the line of action of $\mathbf{F}_1$. When all forces are shifted to $O$ in this manner, we have a system of concurrent forces at $O$ and a system of couple vectors, as represented in part *b* of the figure. The concurrent forces may then be added vectorially to produce a resultant force $\mathbf{R}$, and the couples may also be added to produce a resultant couple $\mathbf{M}$, Fig. 2/28*c*. The general force system, then, is reduced to

$$\begin{aligned} \mathbf{R} &= \mathbf{F}_1 + \mathbf{F}_2 + \mathbf{F}_3 + \cdots = \Sigma\mathbf{F} \\ \mathbf{M} &= \mathbf{M}_1 + \mathbf{M}_2 + \mathbf{M}_3 + \cdots = \Sigma(\mathbf{r} \times \mathbf{F}) \end{aligned} \tag{2/20}$$

The couple vectors are shown through point $O$, but because they are free vectors, they may be represented in any parallel positions. The magnitudes of the resultants and their components are

$$\begin{gathered} R_x = \Sigma F_x \qquad R_y = \Sigma F_y \qquad R_z = \Sigma F_z \\ R = \sqrt{(\Sigma F_x)^2 + (\Sigma F_y)^2 + (\Sigma F_z)^2} \\ \mathbf{M}_x = \Sigma(\mathbf{r} \times \mathbf{F})_x \qquad \mathbf{M}_y = \Sigma(\mathbf{r} \times \mathbf{F})_y \qquad \mathbf{M}_z = \Sigma(\mathbf{r} \times \mathbf{F})_z \\ M = \sqrt{M_x^2 + M_y^2 + M_z^2} \end{gathered} \tag{2/21}$$

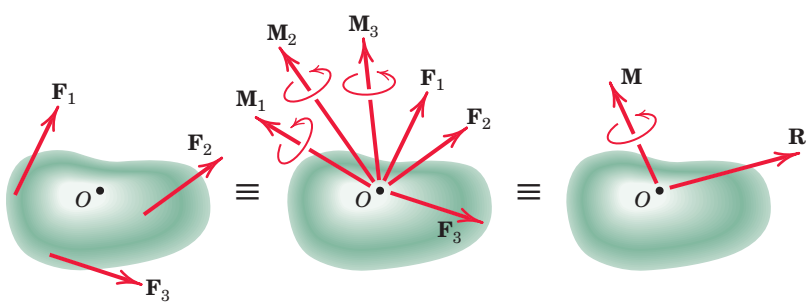


(*a*) (*b*) (*c*)

**Figure 2/28**

The point $O$ selected as the point of concurrency for the forces is arbitrary, and the magnitude and direction of $\mathbf{M}$ depend on the particular point $O$ selected. The magnitude and direction of $\mathbf{R}$, however, are the same no matter which point is selected.

In general, any system of forces may be replaced by its resultant force $\mathbf{R}$ and the resultant couple $\mathbf{M}$. In dynamics we usually select the mass center as the reference point. The change in the linear motion of the body is determined by the resultant force, and the change in the angular motion of the body is determined by the resultant couple. In statics, the body is in *complete equilibrium* when the resultant force $\mathbf{R}$ is zero and the resultant couple $\mathbf{M}$ is also zero. Thus, the determination of resultants is essential in both statics and dynamics.

We now examine the resultants for several special force systems.

***Concurrent Forces.*** When forces are concurrent at a point, only the first of Eqs. 2/20 needs to be used because there are no moments about the point of concurrency.

***Parallel Forces.*** For a system of parallel forces not all in the same plane, the magnitude of the parallel resultant force $\mathbf{R}$ is simply the magnitude of the algebraic sum of the given forces. The position of its line of action is obtained from the principle of moments by requiring that $\mathbf{r} \times \mathbf{R} = \mathbf{M}_O$. Here $\mathbf{r}$ is a position vector extending from the force–couple reference point $O$ to the final line of action of $\mathbf{R}$, and $\mathbf{M}_O$ is the sum of the moments of the individual forces about $O$. See Sample Problem 2/17 for an example of parallel-force systems.

***Coplanar Forces.*** Article 2/6 was devoted to this force system.

***Wrench Resultant.*** When the resultant couple vector $\mathbf{M}$ is parallel to the resultant force $\mathbf{R}$, as shown in Fig. 2/29, the resultant is called a *wrench*. By definition a wrench is positive if the couple and force vectors point in the same direction and negative if they point in opposite directions. A common example of a positive wrench is found with the application of a screwdriver, to drive a right-handed screw. Any general force system may be represented by a wrench applied along a unique line of action. This reduction is illustrated in Fig. 2/30, where part $a$ of the figure represents, for the general force system, the resultant force $\mathbf{R}$ acting at some point $O$ and the corresponding resultant couple $\mathbf{M}$. Although $\mathbf{M}$ is a free vector, for convenience we represent it as acting through $O$.

In part $b$ of the figure, $\mathbf{M}$ is resolved into components $\mathbf{M}_1$ along the direction of $\mathbf{R}$ and $\mathbf{M}_2$ normal to $\mathbf{R}$. In part $c$ of the figure, the couple $\mathbf{M}_2$ is replaced by its equivalent of two forces $\mathbf{R}$ and $-\mathbf{R}$ separated by a distance

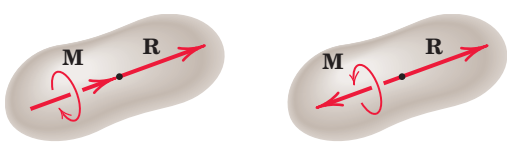


Positive wrench Negative wrench

**Figure 2/29**

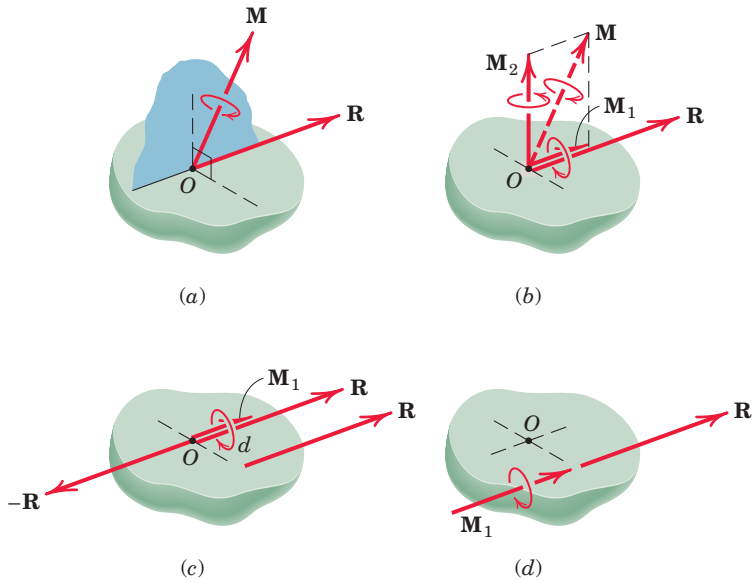


**Figure 2/30**

$d = M_2/R$ with $-\mathbf{R}$ applied at $O$ to cancel the original $\mathbf{R}$. This step leaves the resultant $\mathbf{R}$, which acts along a new and unique line of action, and the parallel couple $\mathbf{M}_1$, which is a free vector, as shown in part $d$ of the figure. Thus, the resultants of the original general force system have been transformed into a wrench (positive in this illustration) with its unique axis defined by the new position of $\mathbf{R}$.

We see from Fig. 2/30 that the axis of the wrench resultant lies in a plane through $O$ normal to the plane defined by $\mathbf{R}$ and $\mathbf{M}$. The wrench is the simplest form in which the resultant of a general force system may be expressed. This form of the resultant, however, has limited application, because it is usually more convenient to use as the reference point some point $O$ such as the mass center of the body or another convenient origin of coordinates not on the wrench axis.

## SAMPLE PROBLEM 2/16

Determine the resultant of the force and couple system which acts on the rectangular solid.

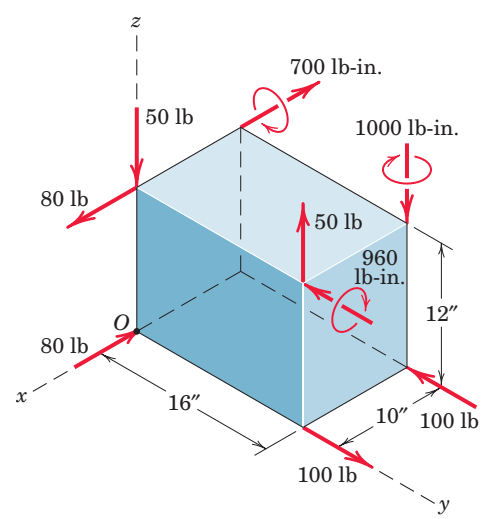


***Solution.*** We choose point $O$ as a convenient reference point for the initial step of reducing the given forces to a force–couple system. The resultant force is

1 $$\mathbf{R} = \Sigma\mathbf{F} = (80 - 80)\mathbf{i} + (100 - 100)\mathbf{j} + (50 - 50)\mathbf{k} = \mathbf{0} \text{ lb}$$

The sum of the moments about $O$ is

2 $$\begin{aligned}\mathbf{M}_O &= [50(16) - 700]\mathbf{i} + [80(12) - 960]\mathbf{j} + [100(10) - 1000]\mathbf{k} \text{ lb-in.}\\ &= 100\mathbf{i} \text{ lb-in.}\end{aligned}$$

Hence, the resultant consists of a couple, which of course may be applied at any point on the body or the body extended.

### Helpful Hints

1 Since the force summation is zero, we conclude that the resultant, if it exists, must be a couple.

2 The moments associated with the force pairs are easily obtained by using the $M = Fd$ rule and assigning the unit-vector direction by inspection. In many three-dimensional problems, this may be simpler than the $\mathbf{M} = \mathbf{r} \times \mathbf{F}$ approach.

## SAMPLE PROBLEM 2/17

Determine the resultant of the system of parallel forces which act on the plate. Solve with a vector approach.

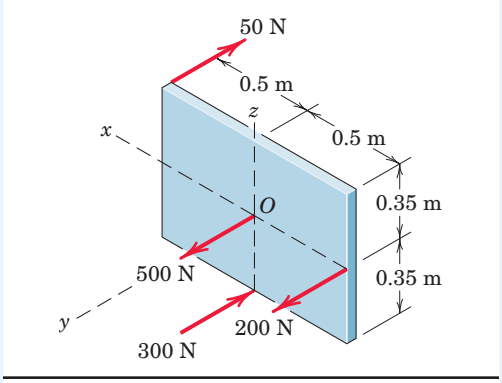


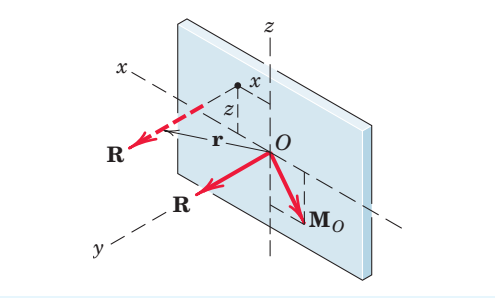


***Solution.*** Transfer of all forces to point $O$ results in the force–couple system

$$\mathbf{R} = \Sigma\mathbf{F} = (200 + 500 - 300 - 50)\mathbf{j} = 350\mathbf{j} \text{ N}$$

$$\begin{aligned}\mathbf{M}_O &= [50(0.35) - 300(0.35)]\mathbf{i} + [-50(0.50) - 200(0.50)]\mathbf{k}\\ &= -87.5\mathbf{i} - 125\mathbf{k} \text{ N}\cdot\text{m}\end{aligned}$$

The placement of $\mathbf{R}$ so that it alone represents the above force–couple system is determined by the principle of moments in vector form

$$\mathbf{r} \times \mathbf{R} = \mathbf{M}_O$$

$$(x\mathbf{i} + y\mathbf{j} + z\mathbf{k}) \times 350\mathbf{j} = -87.5\mathbf{i} - 125\mathbf{k}$$

$$350x\mathbf{k} - 350z\mathbf{i} = -87.5\mathbf{i} - 125\mathbf{k}$$

From the one vector equation we may obtain the two scalar equations

$$350x = -125 \qquad \text{and} \qquad -350z = -87.5$$

Hence, $x = -0.357$ m and $z = 0.250$ m are the coordinates through which the line of action of $\mathbf{R}$ must pass. The value of $y$ may, of course, be any value, as
1 permitted by the principle of transmissibility. Thus, as expected, the variable $y$ drops out of the above vector analysis.

### Helpful Hint

1 You should also carry out a scalar solution to this problem.

## SAMPLE PROBLEM 2/18

Replace the two forces and the negative wrench by a single force **R** applied at $A$ and the corresponding couple **M**.

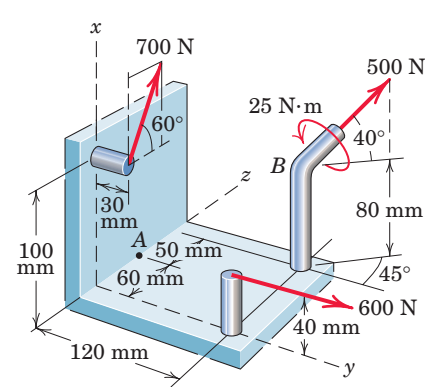


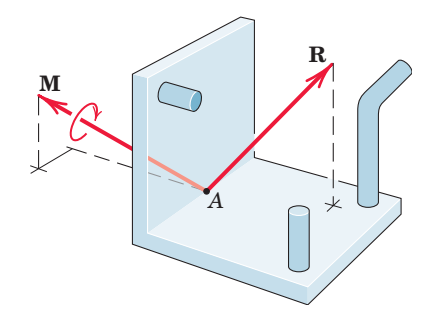


***Solution.*** The resultant force has the components

$[R_x = \Sigma F_x]$ $\quad R_x = 500 \sin 40° + 700 \sin 60° = 928$ N

$[R_y = \Sigma F_y]$ $\quad R_y = 600 + 500 \cos 40° \cos 45° = 871$ N

$[R_z = \Sigma F_z]$ $\quad R_z = 700 \cos 60° + 500 \cos 40° \sin 45° = 621$ N

Thus,
$$\mathbf{R} = 928\mathbf{i} + 871\mathbf{j} + 621\mathbf{k} \text{ N}$$

and
$$R = \sqrt{(928)^2 + (871)^2 + (621)^2} = 1416 \text{ N} \qquad \textit{Ans.}$$

The couple to be added as a result of moving the 500-N force is

1 $[\mathbf{M} = \mathbf{r} \times \mathbf{F}]$
$$\mathbf{M}_{500} = (0.08\mathbf{i} + 0.12\mathbf{j} + 0.05\mathbf{k}) \times 500(\mathbf{i} \sin 40° + \mathbf{j} \cos 40° \cos 45° + \mathbf{k} \cos 40° \sin 45°)$$

where **r** is the vector from $A$ to $B$.

The term-by-term, or determinant, expansion gives

$$\mathbf{M}_{500} = 18.95\mathbf{i} - 5.59\mathbf{j} - 16.90\mathbf{k} \text{ N·m}$$

2 The moment of the 600-N force about $A$ is written by inspection of its $x$- and $z$-components, which gives

$$\mathbf{M}_{600} = (600)(0.060)\mathbf{i} + (600)(0.040)\mathbf{k}$$
$$= 36.0\mathbf{i} + 24.0\mathbf{k} \text{ N·m}$$

The moment of the 700-N force about $A$ is easily obtained from the moments of the $x$- and $z$-components of the force. The result becomes

$$\mathbf{M}_{700} = (700 \cos 60°)(0.030)\mathbf{i} - [(700 \sin 60°)(0.060) + (700 \cos 60°)(0.100)]\mathbf{j} - (700 \sin 60°)(0.030)\mathbf{k}$$
$$= 10.5\mathbf{i} - 71.4\mathbf{j} - 18.19\mathbf{k} \text{ N·m}$$

3 Also, the couple of the given wrench may be written

$$\mathbf{M}' = 25.0(-\mathbf{i} \sin 40° - \mathbf{j} \cos 40° \cos 45° - \mathbf{k} \cos 40° \sin 45°)$$
$$= -16.07\mathbf{i} - 13.54\mathbf{j} - 13.54\mathbf{k} \text{ N·m}$$

Therefore, the resultant couple on adding together the **i**-, **j**-, and **k**-terms of the four **M**'s is

4
$$\mathbf{M} = 49.4\mathbf{i} - 90.5\mathbf{j} - 24.6\mathbf{k} \text{ N·m}$$

and
$$M = \sqrt{(49.4)^2 + (90.5)^2 + (24.6)^2} = 106.0 \text{ N·m} \qquad \textit{Ans.}$$

### Helpful Hints

1 *Suggestion:* Check the cross-product results by evaluating the moments about $A$ of the components of the 500-N force directly from the sketch.

2 For the 600-N and 700-N forces it is easier to obtain the components of their moments about the coordinate directions through $A$ by inspection of the figure than it is to set up the cross-product relations.

3 The 25-N·m couple vector of the *wrench* points in the direction opposite to that of the 500-N force, and we must resolve it into its $x$-, $y$-, and $z$-components to be added to the other couple-vector components.

4 Although the resultant couple vector **M** in the sketch of the resultants is shown through $A$, we recognize that a couple vector is a free vector and therefore has no specified line of action.

## SAMPLE PROBLEM 2/19

Determine the wrench resultant of the three forces acting on the bracket. Calculate the coordinates of the point $P$ in the $x$-$y$ plane through which the resultant force of the wrench acts. Also find the magnitude of the couple $\mathbf{M}$ of the wrench.

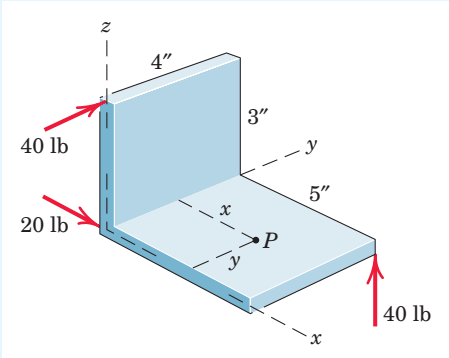


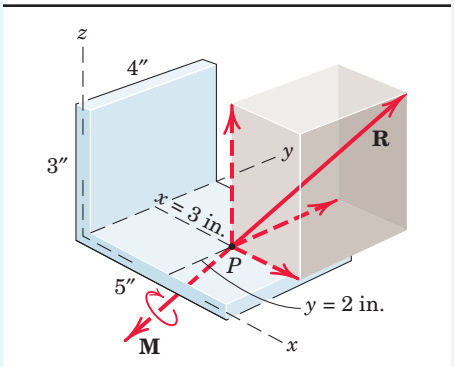


***Solution.*** The direction cosines of the couple $\mathbf{M}$ of the wrench must be the same as those of the resultant force $\mathbf{R}$, assuming that the wrench is positive. The resultant force is (1)

$$\mathbf{R} = 20\mathbf{i} + 40\mathbf{j} + 40\mathbf{k} \text{ lb} \qquad R = \sqrt{(20)^2 + (40)^2 + (40)^2} = 60 \text{ lb}$$

and its direction cosines are

$$\cos\theta_x = 20/60 = 1/3 \quad \cos\theta_y = 40/60 = 2/3 \quad \cos\theta_z = 40/60 = 2/3$$

The moment of the wrench couple must equal the sum of the moments of the given forces about point $P$ through which $\mathbf{R}$ passes. The moments about $P$ of the three forces are

$$(\mathbf{M})_{R_x} = 20y\mathbf{k} \text{ lb-in.}$$

$$(\mathbf{M})_{R_y} = -40(3)\mathbf{i} - 40x\mathbf{k} \text{ lb-in.}$$

$$(\mathbf{M})_{R_z} = 40(4 - y)\mathbf{i} - 40(5 - x)\mathbf{j} \text{ lb-in.}$$

and the total moment is

$$\mathbf{M} = (40 - 40y)\mathbf{i} + (-200 + 40x)\mathbf{j} + (-40x + 20y)\mathbf{k} \text{ lb-in.}$$

The direction cosines of $\mathbf{M}$ are

$$\cos\theta_x = (40 - 40y)/M$$

$$\cos\theta_y = (-200 + 40x)/M$$

$$\cos\theta_z = (-40x + 20y)/M$$

where $M$ is the magnitude of $\mathbf{M}$. Equating the direction cosines of $\mathbf{R}$ and $\mathbf{M}$ gives

$$40 - 40y = \frac{M}{3}$$

$$-200 + 40x = \frac{2M}{3}$$

$$-40x + 20y = \frac{2M}{3}$$

Solution of the three equations gives

$$M = -120 \text{ lb-in.} \qquad x = 3 \text{ in.} \qquad y = 2 \text{ in.} \qquad \textit{Ans.}$$

We see that $M$ turned out to be negative, which means that the couple vector is pointing in the direction opposite to $\mathbf{R}$, which makes the wrench negative.

### Helpful Hint

(1) We assume initially that the wrench is positive. If $\mathbf{M}$ turns out to be negative, then the direction of the couple vector is opposite to that of the resultant force.

# PROBLEMS

## *Introductory Problems*

**2/149** A baseball is thrown with spin so that three concurrent forces act on it as shown in the figure. The weight $W$ is 5 oz, the drag $D$ is 1.7 oz, and the lift $L$ is perpendicular to the velocity $\mathbf{v}$ of the ball. If it is known that the $y$-component of the resultant is $-5.5$ oz and the $z$-component is $-0.866$ oz, determine $L$, $\theta$, and $R$.

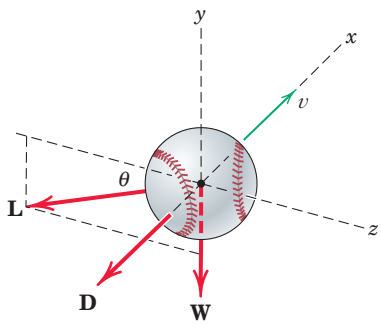


**Problem 2/149**

**2/150** A table exerts the four forces shown on the floor surface. Reduce the force system to a force–couple system at point $O$. Show that $\mathbf{R}$ is perpendicular to $\mathbf{M}_O$.

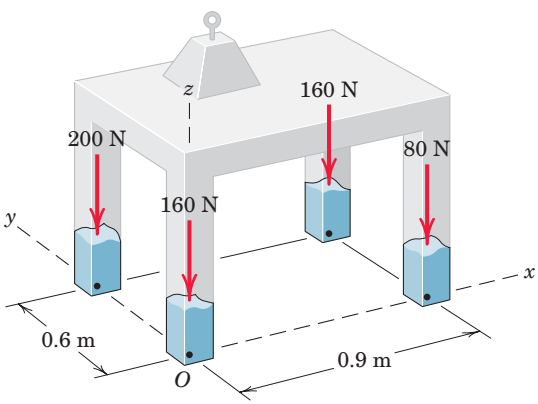


**Problem 2/150**

**2/151** Two forces act on the rectangular plate as shown. Reduce this force system to an equivalent force–couple system acting at point $O$. Then determine the resultant of the system, expressed as a single force if possible, with its line of action.

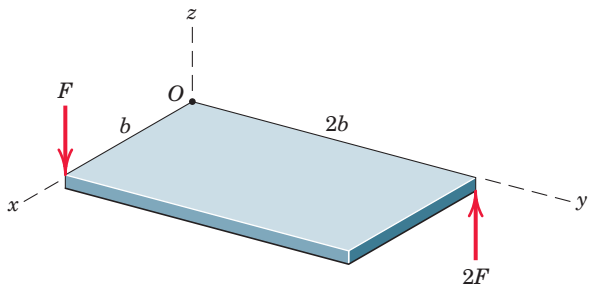


**Problem 2/151**

**2/152** The concrete slab supports the six vertical loads shown. Determine the $x$- and $y$-coordinates of the point on the slab through which the resultant of the loading system passes.

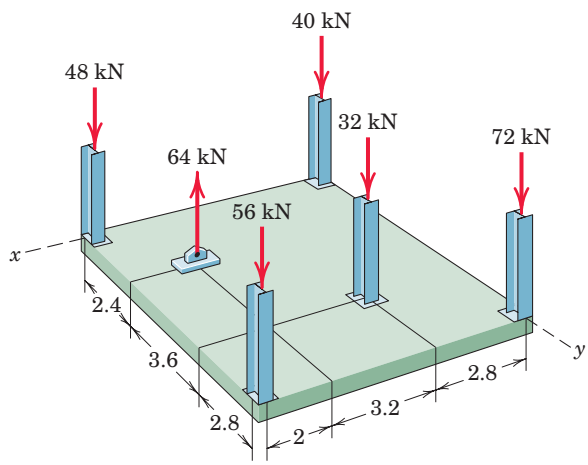


Dimensions in meters

**Problem 2/152**

**2/153** The thin rectangular plate is subjected to the four forces shown. Determine the equivalent force–couple system at $O$. Is $\mathbf{R}$ perpendicular to $\mathbf{M}_O$?

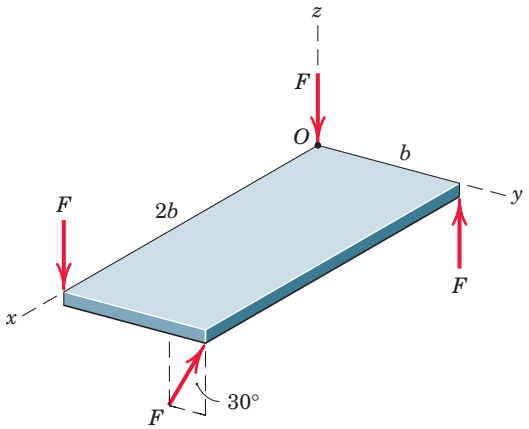


**Problem 2/153**

**2/154** The pulley wheels are subjected to the loads shown. Determine the equivalent force–couple system at point $O$.

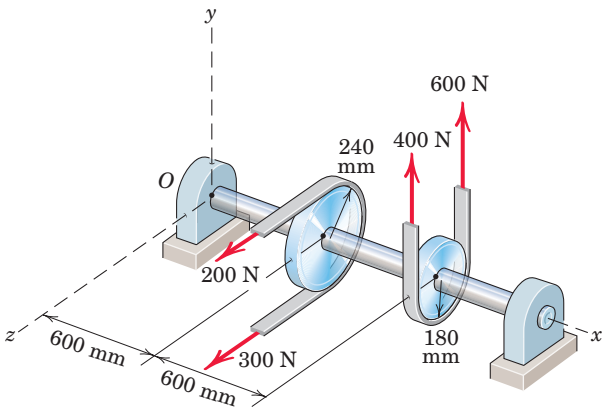


**Problem 2/154**

**2/155** The spacecraft of Prob. 2/135 is repeated here. The plan is to fire four 1.2-lb thrusters as shown in order to spin up the spacecraft about its $z$-axis, but the thruster at $A$ fails. Determine the equivalent forced–couple system at $G$ for the remaining three thrusters.

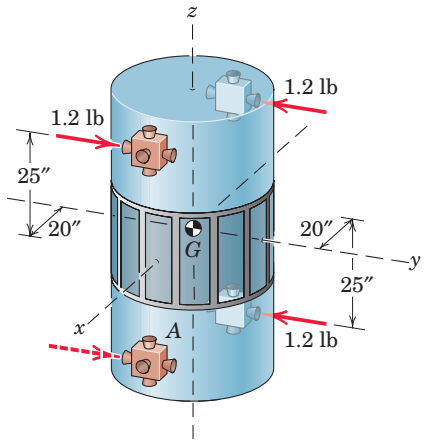


**Problem 2/155**

**2/156** An oil tanker moves away from its docked position under the action of reverse thrust from screw $A$, forward thrust from screw $B$, and side thrust from the bow thruster $C$. Determine the equivalent forced–couple system at the mass center $G$.

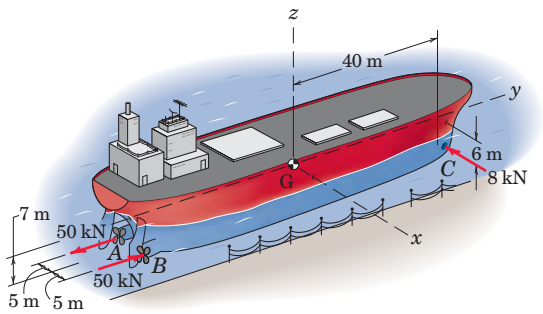


**Problem 2/156**

**2/157** Determine the force–couple system at $O$ which is equivalent to the two forces applied to the shaft $AOB$. Is $\mathbf{R}$ perpendicular to $\mathbf{M}_O$?

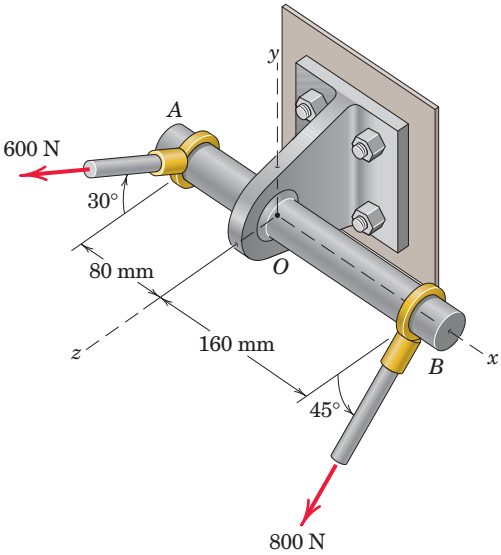


**Problem 2/157**

## *Representative Problems*

**2/158** Replace the two forces and single couple by an equivalent force–couple system at point $A$.

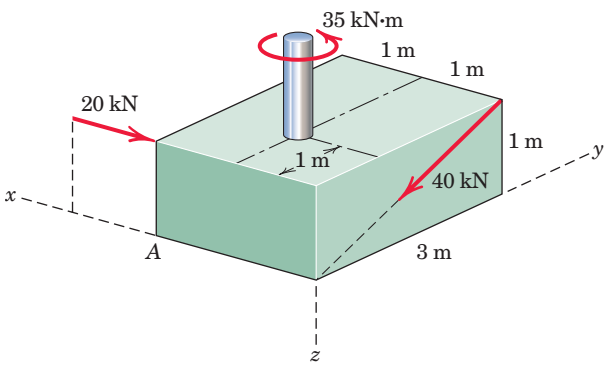


**Problem 2/158**

**2/159** The commercial airliner of Prob. 2/90 is redrawn here with three-dimensional information supplied. If engine 3 suddenly fails, determine the resultant of the three remaining engine thrust vectors, each of which has a magnitude of 90 kN. Specify the $y$- and $z$-coordinates of the point through which the line of action of the resultant passes. This information would be critical to the design criteria of performance with engine failure.

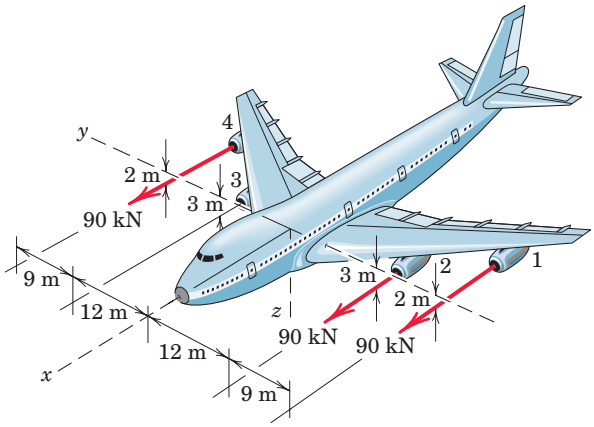


**Problem 2/159**

**2/160** Two upward loads are exerted on the small three-dimensional truss. Reduce these two loads to a single force–couple system at point $O$. Show that $\mathbf{R}$ is perpendicular to $\mathbf{M}_O$. Then determine the point in the $x$-$z$ plane through which the resultant passes.

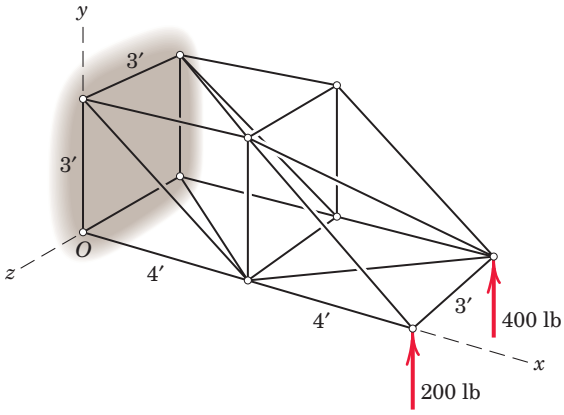


**Problem 2/160**

**2/161** The horizontal top of a concrete column is subjected to the system of forces shown. Represent the resultant of all forces as a force **R** at point $O$ and a couple **M**. Also specify the magnitudes of **R** and **M**.

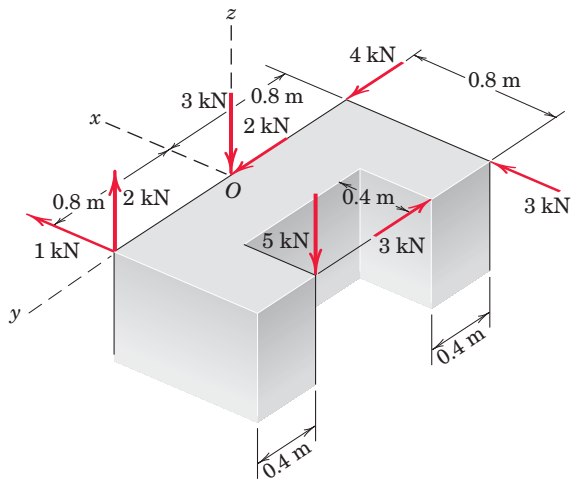


**Problem 2/161**

**2/162** Replace the two forces and one couple acting on the rigid pipe frame by their equivalent resultant force **R** acting at point $O$ and a couple $\mathbf{M}_O$.

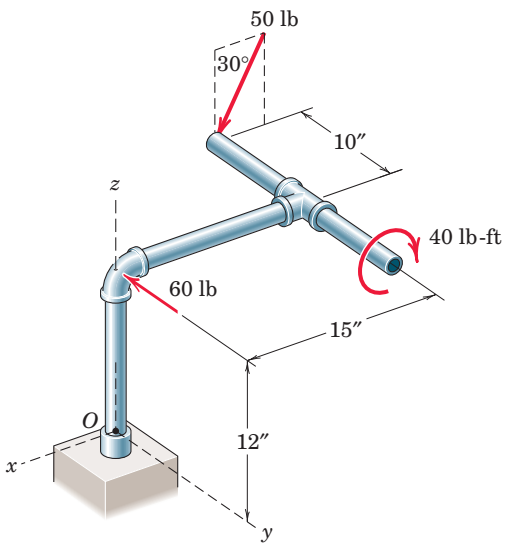


**Problem 2/162**

**2/163** In tightening a bolt whose center is at point $O$, a person exerts a 40-lb force on the ratchet handle with his right hand. In addition, with his left hand he exerts a 20-lb force as shown in order to secure the socket onto the bolt head. Determine the equivalent force–couple system at $O$. Then find the point in the $x$-$y$ plane through which the line of action of the resultant force of the wrench passes.

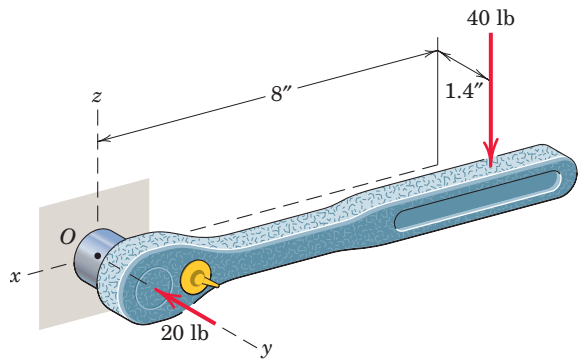


**Problem 2/163**

**2/164** Replace the two forces acting on the pole by a wrench. Write the moment **M** associated with the wrench as a vector and specify the coordinates of the point $P$ in the $y$-$z$ plane through which the line of action of the wrench passes.

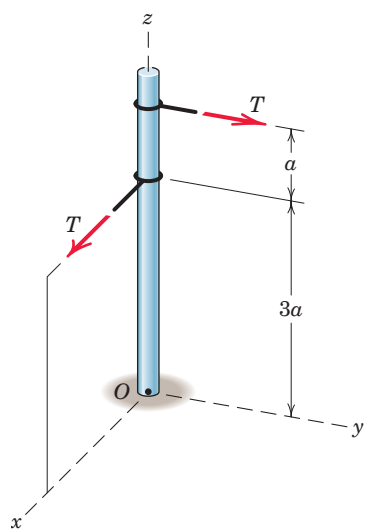


**Problem 2/164**

**2/165** Replace the two forces acting on the frame by a wrench. Write the moment associated with the wrench as a vector and specify the coordinates of the point $P$ in the $y$-$z$ plane through which the line of action of the wrench passes. Note that the force of magnitude $F$ is parallel to the $x$-axis.

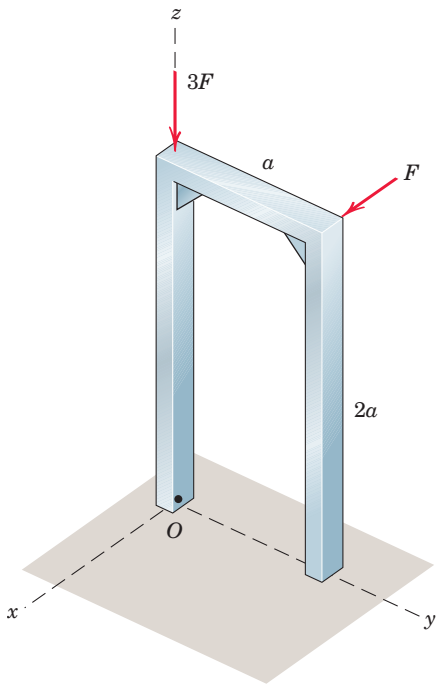


**Problem 2/165**

**2/166** For the system of two forces in Prob. 2/157, determine the coordinates of the point in the $x$-$z$ plane through which the line of action of the resultant of the system passes.

**▶2/167** Replace the two forces acting on the rectangular solid by a wrench. Write the moment **M** associated with the wrench as a vector and specify the coordinates of the point $P$ in the $x$-$y$ plane through which the line of action of the wrench passes.

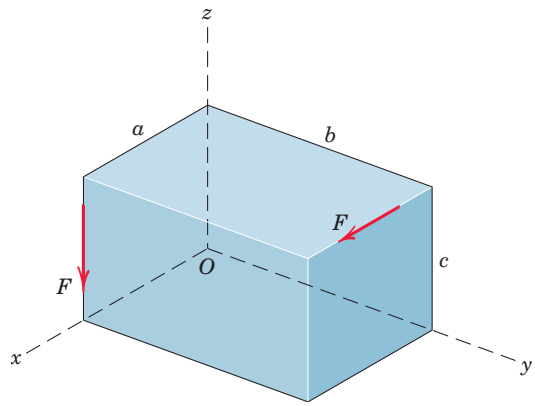


**Problem 2/167**

**▶2/168** Replace the system of two forces and couple shown in Prob. 2/158 by a wrench. Determine the magnitude of the moment **M** of the wrench, the magnitude of the force **R** of the wrench, and the coordinates of the point $P$ in the $x$-$y$ plane through which **R** passes.

## 2/10 Chapter Review

In Chapter 2 we have established the properties of forces, moments, and couples, and the correct procedures for representing their effects. Mastery of this material is essential for our study of equilibrium in the chapters which follow. Failure to correctly use the procedures of Chapter 2 is a common cause of errors in applying the principles of equilibrium. When difficulties arise, you should refer to this chapter to be sure that the forces, moments, and couples are correctly represented.

### Forces

There is frequent need to represent forces as vectors, to resolve a single force into components along desired directions, and to combine two or more concurrent forces into an equivalent resultant force. Specifically, you should be able to:

1. Resolve a given force vector into its components along given directions, and express the vector in terms of the unit vectors along a given set of axes.
2. Express a force as a vector when given its magnitude and information about its line of action. This information may be in the form of two points along the line of action or angles which orient the line of action.
3. Use the dot product to compute the projection of a vector onto a specified line and the angle between two vectors.
4. Compute the resultant of two or more forces concurrent at a point.

### Moments

The tendency of a force to rotate a body about an axis is described by a moment (or torque), which is a vector quantity. We have seen that finding the moment of a force is often facilitated by combining the moments of the components of the force. When working with moment vectors you should be able to:

1. Determine a moment by using the moment-arm rule.
2. Use the vector cross product to compute a moment vector in terms of a force vector and a position vector locating the line of action of the force.
3. Utilize Varignon's theorem to simplify the calculation of moments, in both scalar and vector forms.
4. Use the triple scalar product to compute the moment of a force vector about a given axis through a given point.

### Couples

A couple is the combined moment of two equal, opposite, and noncollinear forces. The unique effect of a couple is to produce a pure twist or rotation regardless of where the forces are located. The couple is useful in replacing a force acting at a point by a force–couple system at

a different point. To solve problems involving couples you should be able to:

1. Compute the moment of a couple, given the couple forces and either their separation distance or any position vectors locating their lines of action.
2. Replace a given force by an equivalent force–couple system, and vice versa.

## Resultants

We can reduce an arbitrary system of forces and couples to a single resultant force applied at an arbitrary point, and a corresponding resultant couple. We can further combine this resultant force and couple into a wrench to give a single resultant force along a unique line of action, together with a parallel couple vector. To solve problems involving resultants you should be able to:

1. Compute the magnitude, direction, and line of action of the resultant of a system of coplanar forces if that resultant is a force; otherwise, compute the moment of the resultant couple.
2. Apply the principle of moments to simplify the calculation of the moment of a system of coplanar forces about a given point.
3. Replace a given general force system by a wrench along a specific line of action.

## Equilibrium

You will use the preceding concepts and methods when you study equilibrium in the following chapters. Let us summarize the concept of equilibrium:

1. When the resultant force on a body is zero ($\Sigma\mathbf{F} = \mathbf{0}$), the body is in *translational* equilibrium. This means that its center of mass is either at rest or moving in a straight line with constant velocity.
2. In addition, if the resultant couple is zero ($\Sigma\mathbf{M} = \mathbf{0}$), the body is in *rotational* equilibrium, either having no rotational motion or rotating with a constant angular velocity.
3. When both resultants are zero, the body is in *complete* equilibrium.

## REVIEW PROBLEMS

**2/169** A cable stretched between the fixed supports $A$ and $B$ is under a tension $T$ of 2 kN. Express the tension as a vector using the unit vectors **i** and **j**, first, as a force $\mathbf{T}_A$ acting on $A$ and second, as a force $\mathbf{T}_B$ acting on $B$.

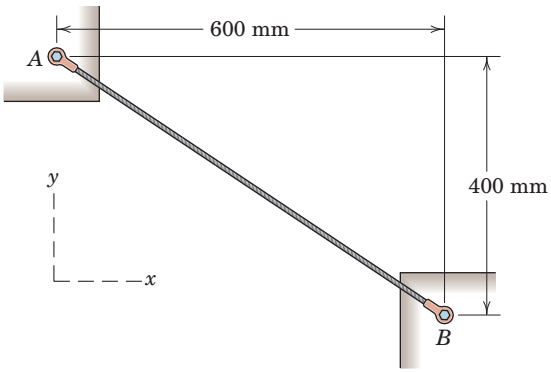


**Problem 2/169**

**2/170** It is known that the $y$-component of the force **F** exerted on pin $P$ is 20 lb when $\theta = 30°$ and $\beta = 15°$. Determine the force magnitude $F$ and the $x$-component of **F**.

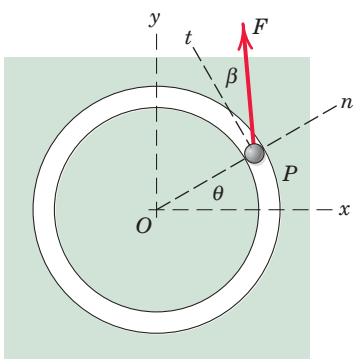


**Problem 2/170**

**2/171** The three forces act perpendicular to the rectangular plate as shown. Determine the moments $\mathbf{M}_1$ of $\mathbf{F}_1$, $\mathbf{M}_2$ of $\mathbf{F}_2$, and $\mathbf{M}_3$ of $\mathbf{F}_3$, all about point $O$.

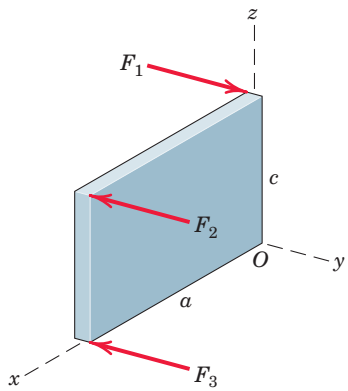


**Problem 2/171**

**2/172** A die is being used to cut threads on a rod. If 15-lb forces are applied as shown, determine the magnitude $F$ of the equal forces exerted on the $\frac{1}{4}$-in. rod by each of the four cutting surfaces so that their external effect on the rod is equivalent to that of the two 15-lb forces.

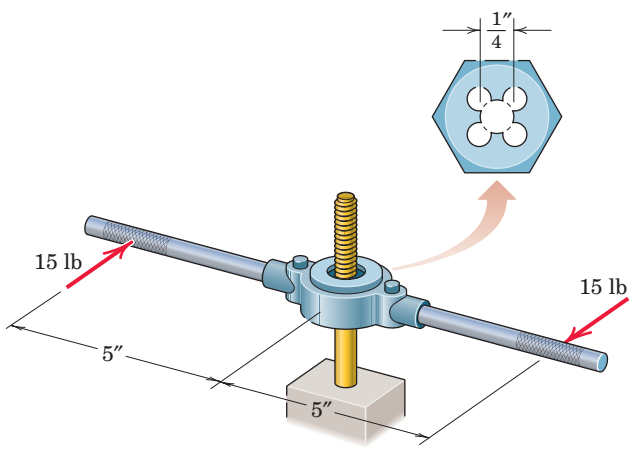


**Problem 2/172**

**2/173** The control lever is subjected to a clockwise couple of 80 N·m exerted by its shaft at $A$ and is designed to operate with a 200-N pull as shown. If the resultant of the couple and the force passes through $A$, determine the proper dimension $x$ of the lever.

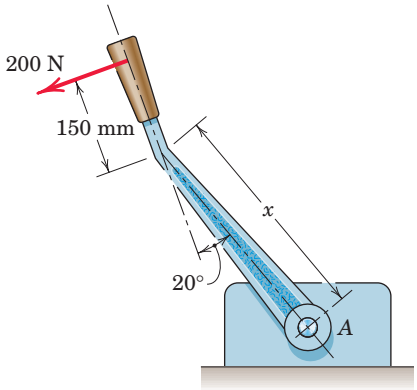


**Problem 2/173**

**2/174** Calculate the moment $M_O$ of the 250-N force about the base point $O$ of the robot.

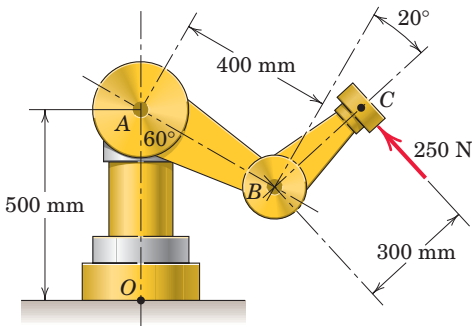


**Problem 2/174**

**2/175** Replace the three forces shown by an equivalent force–couple system at point $A$. If the forces are replaced by a single resultant force, determine the distance $d$ below point $A$ to its line of action.

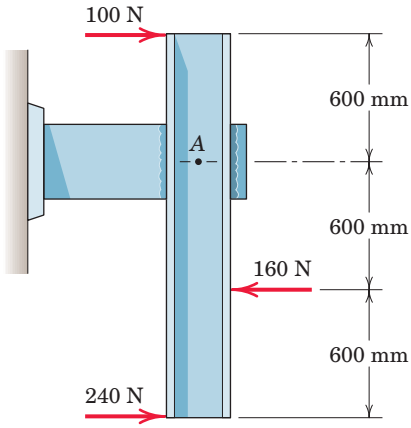


**Problem 2/175**

**2/176** Reduce the given loading system to a force–couple system at point $A$. Then determine the distance $x$ to the right of point $A$ at which the resultant of the three forces acts.

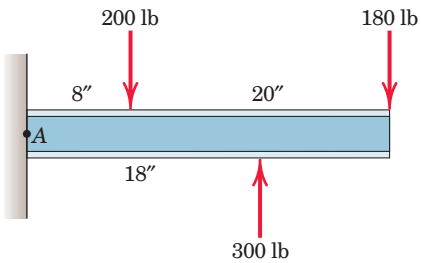


**Problem 2/176**

**2/177** Represent the resultant of the three forces and couple by a force–couple system located at point $A$.

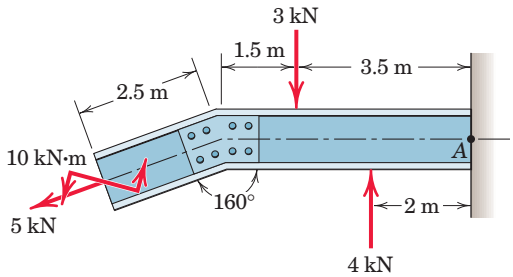


**Problem 2/177**

**2/178** Express and identify the resultant of the two forces and one couple shown acting on the shaft angled in the $x$-$z$ plane.

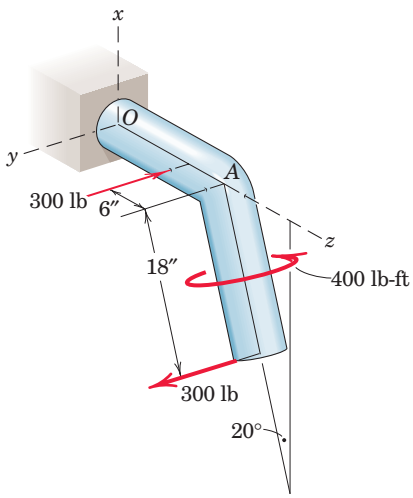


**Problem 2/178**

**2/179** When the pole $OA$ is in the position shown, the tension in cable $AB$ is 3 kN. (*a*) Write the tension force exerted on the small collar at point $A$ as a vector using the coordinates shown. (*b*) Determine the moment of this force about point $O$ and state the moments about the $x$-, $y$-, and $z$-axes. (*c*) Determine the projection of this tension force onto line $AO$.

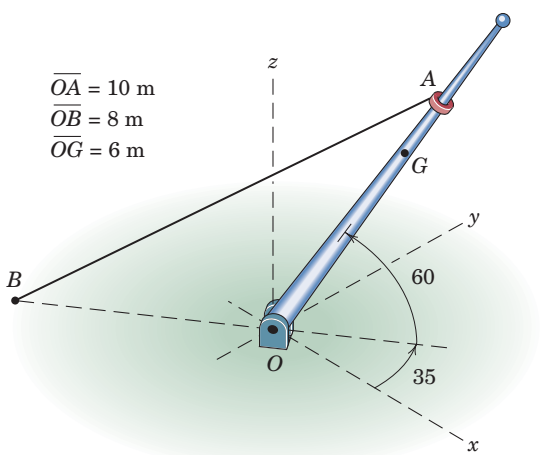


**Problem 2/179**

**2/180** A force **F** acts along the line $AB$ inside the right circular cylindrical shell as shown. The quantities $r$, $h$, $\theta$, and $F$ are known. Using the $x$-, $y$-, and $z$-coordinates shown, express **F** as a vector.

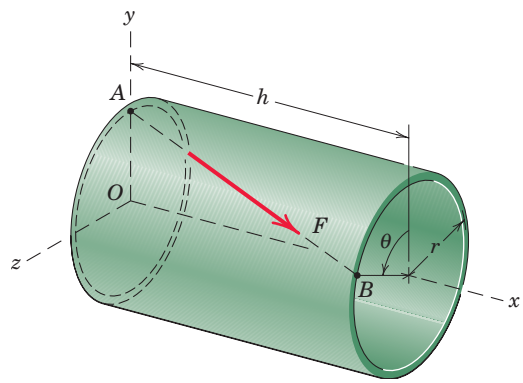


**Problem 2/180**

**2/181** The spring which connects point $B$ of the disk and point $C$ on the vertical surface is under a tension of 500 N. Write this tension as it acts on point $B$ as a force vector **T** in terms of the unit vectors **i**, **j**, and **k**, and determine the moment $M_z$ of this force about the shaft axis $OA$.

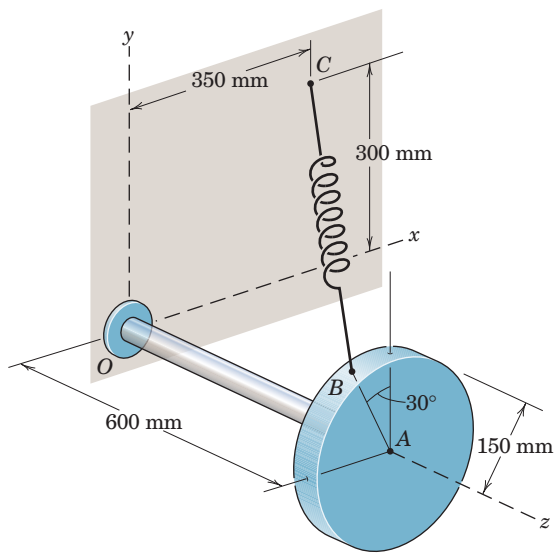


**Problem 2/181**

**2/182** Three couples are formed by the three pairs of equal and opposite forces. Determine the resultant **M** of the three couples.

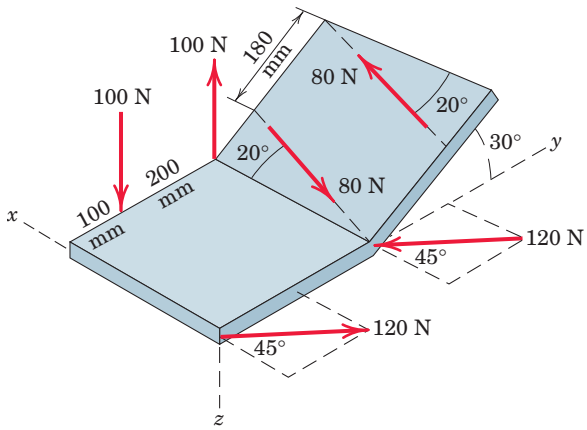


**Problem 2/182**

**2/183** The combined action of the three forces on the base at $O$ may be obtained by establishing their resultant through $O$. Determine the magnitudes of **R** and the accompanying couple **M**.

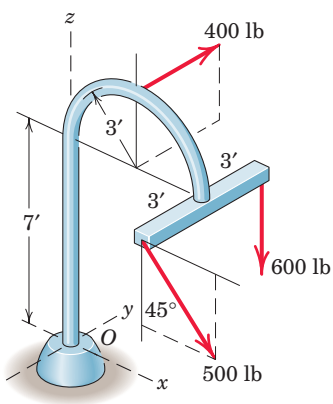


**Problem 2/183**

## *Computer-Oriented Problems

*** 2/184** The eyebolt supports the four forces shown. If the net effect on the bolt is a direct pull of 3 kN in the $x$-direction, determine the necessary values of $\theta$ and $T$.

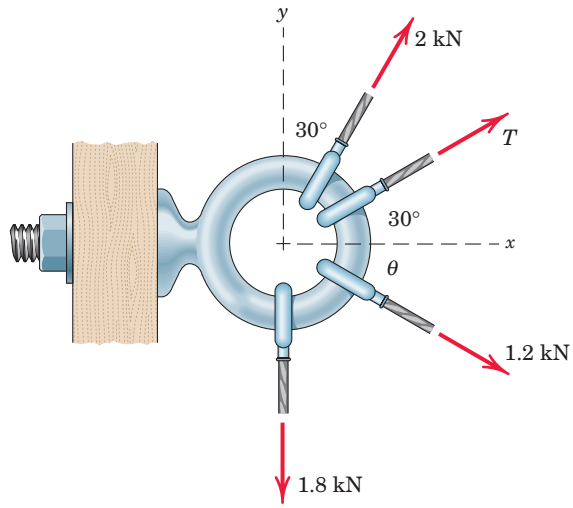


**Problem 2/184**

*** 2/185** The throttle-control lever $OA$ rotates in the range $0 \le \theta \le 90°$. An internal torsional return spring exerts a restoring moment about $O$ given by $M = K(\theta + \pi/4)$, where $K = 500$ N·mm/rad and $\theta$ is in radians. Determine and plot as a function of $\theta$ the tension $T$ required to make the net moment about $O$ zero. Use the two values $d = 60$ mm and $d = 160$ mm and comment on the relative design merits. The effects of the radius of the pulley at $B$ are negligible.

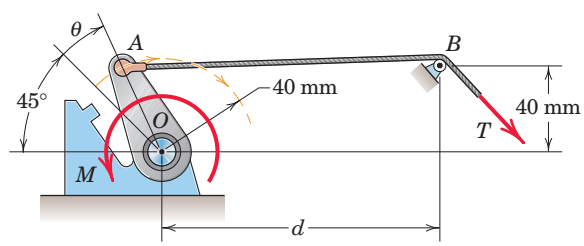


**Problem 2/185**

*** 2/186** The figure of Prob. 2/78 is repeated here. The force of magnitude $F$ acts along line $MA$, where $M$ is the midpoint of the radius along the $x$-axis. Determine and plot the moment $M_O$ of the force about the origin $O$ as a function of $\theta$ over the range $0 \le \theta \le 90°$. State the maximum value of $M_O$ and the corresponding value of $\theta$.

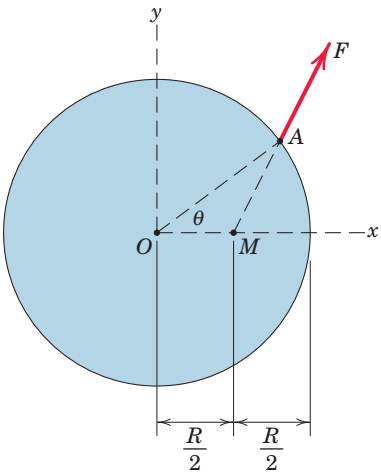


**Problem 2/186**

*** 2/187** A motor attached to the shaft at $O$ causes the arm $OA$ to rotate over the range $0 \leq \theta \leq 180°$. The unstretched length of the spring is 0.65 m, and it can support both tension and compression. If the net moment about $O$ must be zero, determine and plot the required motor torque $M$ as a function of $\theta$.

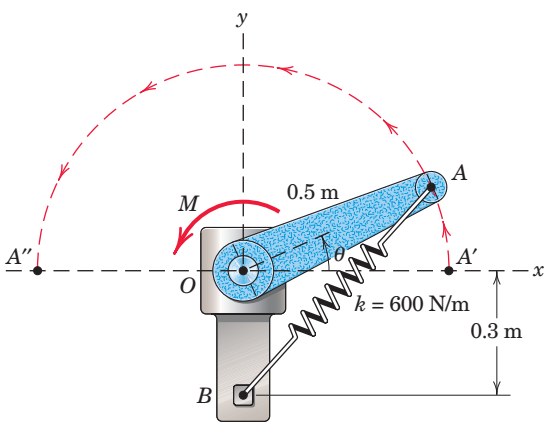


**Problem 2/187**

*** 2/188** A person locks his elbow so that the angle $ABC$ is maintained at 130° and rotates the shoulder joint at $A$ so that the arm remains in the vertical plane shown. The shoulder joint remains fixed. Determine and plot on the same axes the moments about points $A$ and $B$ of the weight of the 8-lb sphere as the angle $\theta$ is varied from 0 to 120°. Comment on the physical significance of the maximum value of the moment on each curve.

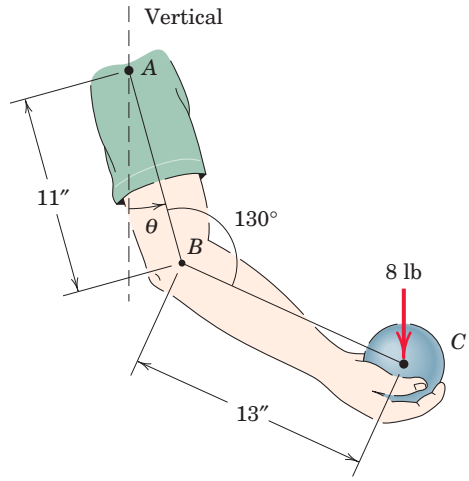


**Problem 2/188**

*** 2/189** The tension $T$ in cable $AB$ is maintained at a constant value of 120 N. Determine the moment $\mathbf{M}_O$ of this tension about point $O$ over the range $0 \leq \theta \leq 90°$. Plot the $x$-, $y$-, and $z$-components of $\mathbf{M}_O$ as functions of $\theta$.

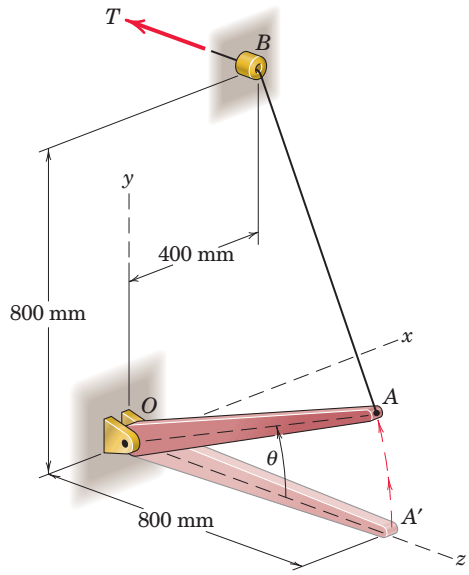


**Problem 2/189**

*** 2/190** Assume that the hydraulic cylinder $AB$ exerts a force $\mathbf{F}$ of constant magnitude 500 lb as the bin is elevated. Determine and plot the moment of this force about the point $O$ for the range $0 \leq \theta \leq 90°$. At what angle $\theta$ is this moment a maximum and what is the maximum moment?

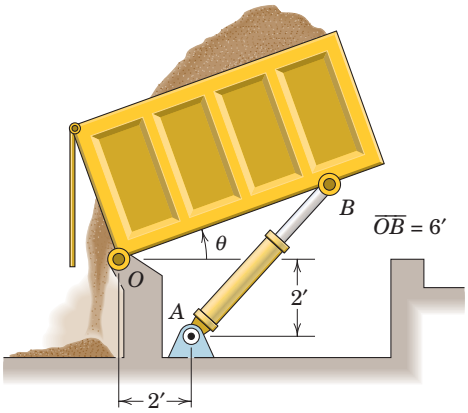


**Problem 2/190**

*** 2/191** As part of the design process for a larger mechanism, the portion shown in the figure is considered. The spring of modulus $k = 200$ N/m is attached to the fixed point $O$ and to the slider $A$ which moves along the slot. The unstretched length of the spring is 150 mm, and the force in the spring is the constant $k$ times the deflection of the spring. Plot the $x$-, $y$-, and $z$-components of the spring force as applied to $A$ as the slider moves in the range $-200 \leq x \leq 200$ mm.

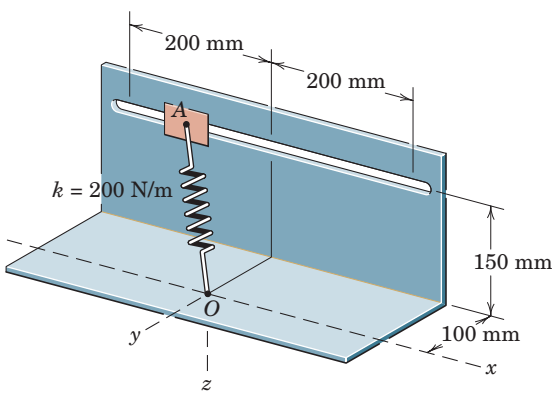


**Problem 2/191**

*** 2/192** The arm $AB$ rotates in the range $0 \leq \theta \leq 180°$, and the spring is unstretched when $\theta = 90°$. Determine as a function of $\theta$ the moment about $O$ of the spring force as applied at $B$. Plot the three scalar components of $\mathbf{M}_O$, and state the maximum absolute value of each component.

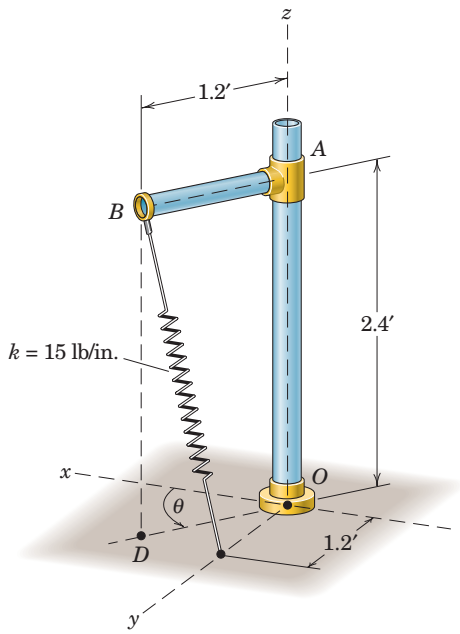


**Problem 2/192**

# Index

# Problem Answers

(When a problem asks for both a general and a specific result, only the specific result might be listed below.)

## Chapter 1

**1/1** $\theta_x = 36.9°$, $\theta_y = 126.9°$, $\mathbf{n} = 0.8\mathbf{i} - 0.6\mathbf{j}$
**1/2** $V = 16.51$ units, $\theta_x = 83.0°$
**1/3** $V' = 14.67$ units, $\theta_x = 162.6°$
**1/4** $\theta_x = 56.1°$, $\theta_y = 138.0°$, $\theta_z = 68.2°$
**1/5** $m = 93.2$ slugs, $m = 1361$ kg
**1/6** $W = 819$ N, $W = 184.1$ lb
**1/7** $W = 578$ N, $m = 4.04$ slugs, $m = 58.9$ kg
**1/8** $A + B = 8.40$, $A - B = 4.94$
$AB = 11.51$, $A/B = 3.86$
**1/9** $F = 1.984(10^{20})$ N, $F = 4.46(10^{19})$ lb
**1/10** $F = 1.358(10^{-9})$ N
**1/11** $\theta = 5°$: $n_s = 0.1270\%$, $n_t = -0.254\%$
$\theta = 10°$: $n_s = 0.510\%$, $n_t = -1.017\%$
$\theta = 20°$: $n_s = 2.06\%$, $n_t = -4.09\%$

## Chapter 2

**2/1** $F_x = 460$ N, $F_y = -386$ N, $\mathbf{F} = 460\mathbf{i} - 386\mathbf{j}$ N
**2/2** $\mathbf{F} = -346\mathbf{i} + 200\mathbf{j}$ lb
$F_x = -346$ lb, $F_y = 200$ lb
$\mathbf{F}_x = -346\mathbf{i}$ lb, $\mathbf{F}_y = 200\mathbf{j}$ lb
**2/3** $\mathbf{F} = -6\mathbf{i} - 2.5\mathbf{j}$ kN
**2/4** $F_x = 2650$ lb, $F_y = 1412$ lb
**2/5** $\mathbf{F} = -1080\mathbf{i} - 1440\mathbf{j}$ N
**2/6** $F_x = -F \sin \beta$, $F_y = -F \cos \beta$
$F_n = F \sin (\alpha+\beta)$, $F_t = F \cos (\alpha+\beta)$
**2/7** $R = 3.80$ kN, $\theta = 338°$ (or $-21.6°$)
**2/8** $F_n = -62.9$ N, $F = 97.9$ N
**2/9** $\theta = 49.9°$, $R = 1077$ lb
**2/10** (*a*) $F_n = 34.2$ N, $F_t = 94.0$ N
(*b*) $F_n = -17.36$ N, $F_t = 98.5$ N
**2/11** $\mathbf{R} = 2.35\mathbf{i} - 3.45\mathbf{j}$ kips
**2/12** $F_t = \dfrac{Fs}{r}$, $F_n = -\dfrac{F\sqrt{r^2 - s^2}}{r}$
**2/13** $T = 5.83$ kN, $R = 9.25$ kN
**2/14** $\mathbf{R} = 600\mathbf{i} + 346\mathbf{j}$ N, $R = 693$ N
**2/15** $F_t = 1.286$ kN, $F_n = 1.532$ kN

**2/16** $T_x = \dfrac{T(1 + \cos\theta)}{\sqrt{3 + 2\cos\theta - 2\sin\theta}}$

$T_y = \dfrac{T(\sin\theta - 1)}{\sqrt{3 + 2\cos\theta - 2\sin\theta}}$

**2/17** $T_n = 66.7$ N, $T_t = 74.5$ N

**2/18** $R = 50.2$ lb, $\theta = 84.3°$

**2/19** $\mathbf{R} = 88.8\mathbf{i} + 245\mathbf{j}$ N

**2/20** $R_a = 1170$ N, $R_b = 622$ N, $P_a = 693$ N

**2/21** $F_a = 1093$ lb, $F_b = 980$ lb
$P_a = 400$ lb, $P_b = 207$ lb

**2/22** $F_a = 1.935$ kN, $F_b = 2.39$ kN
$P_a = 3.63$ kN, $P_b = 3.76$ kN

**2/23** (*a*) $R = 872$ N, $\theta = 36.6°$
(*b*) $\mathbf{R} = 520\mathbf{i} - 700\mathbf{j}$ N

**2/24** $P = 537$ lb, $T = 800$ lb

**2/25** $\theta = 51.3°$, $\beta = 18.19°$

**2/26** $T_n = 333$ N, $T_t = -672$ N

**2/27** $\theta = 51.3°$, $\beta = 18.19°$

**2/28** $BC$: $P_t = -77.9$ N, $P_n = 45.0$ N
$AB$: $P_t = 63.6$ N, $P_n = 63.6$ N

▶**2/29** $F_x = -101.2$ N, $F_y = 194.4$ N

▶**2/30** $F_n = 50.4$ N, $F_t = -39.2$ N

**2/31** $M_O = 2.68$ kN·m CCW, $\mathbf{M}_O = 2.68\mathbf{k}$ kN·m
$(x, y) = (-1.3, 0)$ and $(0, 0.78)$m

**2/32** $M_B = 83.2$ lb-ft CW

**2/33** $T = 36$ N

**2/34** $M_O = \dfrac{Fbh}{\sqrt{b^2 + h^2}}$ CW

**2/35** $M_O = 46.4$ N·m CW

**2/36** $M_O = 43.4$ N·m CW

**2/37** $M_O = 70.0$ lb-ft CW

**2/38** $M_O = 5.64$ N·m CW

**2/39** $M_O = mgb\left(1 - \dfrac{2}{\pi}\right)$ CW

**2/40** $M_B = 48$ N·m CW
$M_A = 81.9$ N·m CW

**2/41** $M_O = 0.268$ lb-in. CCW

**2/42** $M_O = 191.0$ N·m CCW

**2/43** $M_O = 102.8$ lb-ft CCW

**2/44** $M_O = Tr\sin(\alpha + \theta)$ CW
$M_P = Tr[\cos\alpha + \sin(\alpha + \theta)]$ CW

**2/45** $\theta = \tan^{-1}\left(\dfrac{h}{b}\right)$

**2/46** $M_O = 130$ lb-in. CCW

**2/47** $M_O = 0.1335 + 0.0282s$ N·mm

**2/48** $M_O = 0.866$ N·m CCW

**2/49** $M_O = 128.6$ lb-in. CW, $T = 64.3$ lb

**2/50** $M_O = 23.5$ N·m CCW

**2/51** $M_O = 5010$ lb-ft CCW

**2/52** $\theta = 65.8°$, $M_O = 740$ lb-in. CW

**2/53** $\theta = 57.5°$

**2/54** $M_O = 80.2\mathbf{k}$ lb-ft

**2/55** $M_O = 26.8$ N·m CCW

**2/56** $F_{DE} = 141.6$ lb, $R = 220$ lb at 94.6°

**2/57** $M_O = 0.902$ kN·m CW

**2/58** $M_O = 41.5$ N·m CW
$\alpha = 33.2°$, $(M_O)_{max} = 41.6$ N·m CW

**2/59** $M = 1440$ lb-in. CW

**2/60** $F = 12$ kN at 30°, $M_O = 24$ kN·m CW
$M_B = 76.0$ kN·m CW

**2/61** $y_A = -0.4$ m

**2/62** $F = 16.18$ N

**2/63** $M = F(b\cos\theta + h\sin\theta)$ CCW

**2/64** $F = 875$ lb

**2/65** $R = 7$ lb at 60°, $M_O = 14.85$ lb-in. CCW

**2/66** $R = 10$ kN down, $M_O = 0.75$ kN·m CCW

**2/67** $P = 51.4$ kN

**2/68** $d = \dfrac{M_A\sqrt{b^2 + h^2}}{Rb}$ (below $A$)

**2/69** $F = 700$ lb

**2/70** $F = 231$ N

**2/71** $M = 2.60$ N·m CW

**2/72** $R = 50$ N at 110°, $M_O = 17.29$ N·m CCW

**2/73** $\mathbf{F} = 43.4\mathbf{i} + 246\mathbf{j}$ N, $M_O = 60.0$ N·m CW

**2/74** $R = 250$ N at −45°, $M_C = 174.9$ N·m CW

**2/75** $M = 21.7$ N·m CCW

**2/76** $\mathbf{F} = F\left[\dfrac{\frac{b}{2}\mathbf{i} + h\mathbf{j}}{\sqrt{\frac{b^2}{4} + h^2}}\right]$, $M_B = \dfrac{3hbF}{4\sqrt{\frac{b^2}{4} + h^2}}$ CW

**2/77** $y = -40.3$ mm

**2/78** $F$ at 67.5°, $M_O = 0.462FR$ CCW

**2/79** $\theta = 56.9°$, $F = 1361$ lb

**2/80** $R = 17.43$ kN at $\theta_x = 26.1°$

**2/81** (*a*) $\mathbf{R} = -2F\mathbf{j}$, $\mathbf{M}_O = \mathbf{0}$
(*b*) $\mathbf{R} = \mathbf{0}$, $\mathbf{M}_O = Fd\mathbf{k}$
(*c*) $\mathbf{R} = -F\mathbf{i} + F\mathbf{j}$, $\mathbf{M}_O = \mathbf{0}$

**2/82** (*a*) $\mathbf{R} = 2F\mathbf{i}$ along $y = -\dfrac{d}{2}$
(*b*) $\mathbf{R} = -2F\mathbf{i}$ along $y = \dfrac{3d}{4}$
(*c*) $\mathbf{R} = -F\mathbf{i} + \sqrt{3}F\mathbf{j}$ along $y = -\sqrt{3}x + \dfrac{d}{2}$

**2/83** $d = 10.70$ m left of $A$

**2/84** $R = 3$ kN down, $x = 4.33$ m

**2/85** $R = 80$ N left, $y = 40$ mm

**2/86** $y = -10$ in.

**2/87** $\mathbf{R} = 1.644\mathbf{i} + 1.159\mathbf{j}$ kN, $M_A = 2.22$ kN·m CCW

**2/88** $M = 148.0$ N·m CCW

**2/89** $\mathbf{R} = 400\mathbf{i} - 3010\mathbf{j}$ lb
$M_A = 18{,}190$ lb-ft CW, $x = 6.05$ ft

**2/90** $d = 4$ m below $O$

**2/91** $\mathbf{R} = T(1.966\mathbf{i} + 0.259\mathbf{j}), M_O = 2.69T$ CW
$x = -10.39$ m

**2/92** $x = 1.637$ m, $y = -0.997$ m

**2/93** $\mathbf{R} = -15\mathbf{i} - 47.3\mathbf{j}$ kN, $x = 7.42$ m
$y = -23.4$ m

**2/94** $\mathbf{R} = 346\mathbf{i} - 2200\mathbf{j}$ N
$M_A = 11\,000$ N·m CW, $x = 5$ m

**2/95** $x = 7.83$ mm, $y = 14.55$ mm

**2/96** $\mathbf{R} = 45\mathbf{i} - 15\mathbf{j}$ lb, $\mathbf{M}_A = -1650\mathbf{k}$ lb-in.
$y = -\frac{1}{3}x + \frac{110}{3}$ (in.)

**2/97** $\mathbf{R} = 903\mathbf{i} + 175\mathbf{j}$ N, $x = 1.308$ m
$y = -0.253$ m

**2/98** $\mathbf{R} = 185\mathbf{i} + 1133\mathbf{j}$ lb
$M_G = 460$ lb-ft CCW, $x = 4.06$ ft

**2/99** $F_C = F_D = 6.42$ N, $F_B = 98.9$ N

**2/100** $\mathbf{R} = 12.10\mathbf{i} - 18.71\mathbf{j}$ lb, $\mathbf{M}_O = -358\mathbf{k}$ lb-in.
$y = -1.547x + 29.6$ (in.)

**2/101** $\mathbf{F} = 791\mathbf{i} + 403\mathbf{j} + 146.5\mathbf{k}$ lb, $F_y = 403$ lb

**2/102** $\mathbf{F} = 2.05\mathbf{i} + 3.55\mathbf{j} + 2.87\mathbf{k}$ kN
$F_x = 2.05$ kN, $F_{OA} = 3.55$ kN

**2/103** $\mathbf{T} = 2(-0.920\mathbf{i} + 0.383\mathbf{j} + 0.0767\mathbf{k})$ kN

**2/104** $\theta_x = 155.7°$, $\theta_{xz} = 13.17°$

**2/105** $\mathbf{T} = 0.876\mathbf{i} + 0.438\mathbf{j} - 2.19\mathbf{k}$ kN
$T_{AC} = 2.06$ kN

**2/106** $\mathbf{F} = 92.7\mathbf{i} - 61.8\mathbf{j} - 61.8\mathbf{k}$ N

**2/107** $\mathbf{T} = 0.321\mathbf{i} + 0.641\mathbf{j} - 0.962\mathbf{k}$ kN

**2/108** $T_{GF} = 0.978$ kN

**2/109** $\mathbf{F} = 500[0.781\mathbf{i} - 0.488\mathbf{j} + 0.390\mathbf{k}]$ lb
$F_x = 390$ lb, $F_y = -244$ lb, $F_z = 195.2$ lb

**2/110** $F_{CD} = \sqrt{\frac{6}{5}}$ kN, $\theta = 56.8°$

**2/111** $\mathbf{T} = -598\mathbf{i} + 411\mathbf{j} + 189.5\mathbf{k}$ N

**2/112** $\mathbf{T} = 110.7\mathbf{i} - 775\mathbf{j} + 166.0\mathbf{k}$ lb
$\theta_x = 82.0°$, $\theta_y = 165.6°$, $\theta_z = 78.0°$

**2/113** $\theta = 54.9°$

**2/114** $T_{BC} = 251$ N

**2/115** $T = 778$ lb, $\theta_{xy} = 8.88°$

**2/116** $T_{CD} = 46.0$ N

**2/117** $\mathbf{T} = 500(0.370\mathbf{i} + 0.410\mathbf{j} - 0.833\mathbf{k})$ N
$T_{DC} = 458$ N

►**2/118** $\mathbf{F} = \frac{F}{\sqrt{5 - 4\sin\phi}}[(2\sin\phi - 1)(\cos\theta\mathbf{i} + \sin\theta\mathbf{j}) + 2\cos\phi\mathbf{k}]$

►**2/119** $\mathbf{T} = 191.0\mathbf{i} + 28.7\mathbf{j} - 51.8\mathbf{k}$ lb, $T_{xz} = 197.9$ lb

►**2/120** $F_x = \frac{2acF}{\sqrt{a^2 + b^2}\sqrt{a^2 + b^2 + 4c^2}}$
$F_y = \frac{2bcF}{\sqrt{a^2 + b^2}\sqrt{a^2 + b^2 + 4c^2}}$
$F_z = F\sqrt{\frac{a^2 + b^2}{a^2 + b^2 + 4c^2}}$

**2/121** $\mathbf{M}_1 = -cF_1\mathbf{j}, \mathbf{M}_2 = F_2(c\mathbf{j} - b\mathbf{k}), \mathbf{M}_3 = -bF_3\mathbf{k}$

**2/122** $\mathbf{M}_O = -320\mathbf{i} + 160\mathbf{j}$ lb-ft, $M_O = 358$ lb-ft

**2/123** $\mathbf{M}_O = F(-c\mathbf{i} + a\mathbf{k}), \mathbf{M}_A = Fa\mathbf{k}$
$\mathbf{M}_{OB} = -\frac{Fac}{a^2 + b^2}(a\mathbf{i} + b\mathbf{j})$

**2/124** $\mathbf{M} = (-0.450\mathbf{i} + 0.300\mathbf{j})10^6$ lb-in.

**2/125** $\mathbf{M} = (126\mathbf{i} - 36\mathbf{j} + 50.6\mathbf{k})10^3$ lb-in.

**2/126** $M_O = 2.81$ kN·m

**2/127** $\mathbf{M} = -75\mathbf{i} + 22.5\mathbf{j}$ N·m

**2/128** $\mathbf{M}_O = \frac{\rho g}{2}(a^2\mathbf{j} - b^2\mathbf{i})$

**2/129** $\mathbf{M}_z = 208\mathbf{k}$ lb-in.

**2/130** $\mathbf{M}_O = -90.6\mathbf{i} - 690\mathbf{j} - 338\mathbf{k}$ lb-in.
$\mathbf{M}_{OA} = -690$ lb-in.

**2/131** $\mathbf{M}_O = \rho ag(b + \frac{a}{2})[-\sin\theta\mathbf{i} + \cos\theta\mathbf{j}]$

**2/132** $\mathbf{M}_O = 480\mathbf{i} + 2400\mathbf{k}$ N·m

**2/133** $\mathbf{M}_O = -98.7\mathbf{i} + 17.25\mathbf{j} + 29.9\mathbf{k}$ N·m
$M_x = -98.7$ N·m

**2/134** $\mathbf{R} = -598\mathbf{i} + 411\mathbf{j} + 189.5\mathbf{k}$ N
$\mathbf{M}_O = -361\mathbf{i} - 718\mathbf{j} + 419\mathbf{k}$ N·m

**2/135** $\mathbf{M} = -60\mathbf{i} + 48\mathbf{k}$ lb-in.

**2/136** $\mathbf{M} = 3400\mathbf{i} - 51\,000\mathbf{j} - 51\,000\mathbf{k}$ N·m

**2/137** $\mathbf{M}_O = -48.6\mathbf{j} - 9.49\mathbf{k}$ N·m, $d = 74.5$ mm

**2/138** $\mathbf{R} = -38.3\mathbf{i} - 32.1\mathbf{j}$ N
$\mathbf{M}_O = 643\mathbf{i} - 766\mathbf{j} + 6250\mathbf{k}$ N·mm

**2/139** $F = 228$ N

**2/140** $\mathbf{F} = -1.716\mathbf{j} + 28.3\mathbf{k}$ kN
$\mathbf{M} = 5.15\mathbf{i} - 90\mathbf{k}$ kN·m

**2/141** $M_x = 31.1$ N·m
$(M_x)_W = -31.1$ N·m, $M_{OB} = 0$

**2/142** $\mathbf{M}_O = -2.89\mathbf{i} - 0.962\mathbf{k}$ kN·m
$\mathbf{M}_z = -0.962\mathbf{k}$ kN·m

**2/143** $\mathbf{M}_A = -5.40\mathbf{i} + 4.68\mathbf{j}$ lb-in.
$\mathbf{M}_{AB} = -4.05\mathbf{i} - 2.34\mathbf{k}$ lb-in.

**2/144** $\mathbf{M}_O = -260\mathbf{i} + 328\mathbf{j} + 88\mathbf{k}$ N·m

**2/145** $\mathbf{M}_B = -1871\mathbf{i} + 1080\mathbf{j} - 3780\mathbf{k}$ lb-in.
$\mathbf{M}_C = -2840\mathbf{k}$ lb-in., $M_{BC} = 2540$ lb-in.

**2/146** $M_z = 75.0$ N·m
$\mathbf{M}_O = -9.04\mathbf{i} - 414\mathbf{j} + 75.0\mathbf{k}$ N·m

**2/147** $\mathbf{F} = \frac{F}{\sqrt{5}}(\cos\theta\mathbf{i} + \sin\theta\mathbf{j} - 2\mathbf{k})$
$\mathbf{M}_O = \frac{Fh}{\sqrt{5}}(\cos\theta\mathbf{j} - \sin\theta\mathbf{i})$

►**2/148** $\mathbf{M}_O = 136.4\mathbf{i} - 679\mathbf{k}$ lb-in.
$M' = 685$ lb-in.

**2/149** $L = 1$ oz, $\theta = 30°$, $R = 5.82$ oz

**2/150** $R = 600$ N down
$\mathbf{M}_O = -216\mathbf{i} + 216\mathbf{j}$ N·m, $\mathbf{R} \perp \mathbf{M}_O$
**2/151** $\mathbf{R} = F\mathbf{k}$, $\mathbf{M}_O = Fb(4\mathbf{i} + \mathbf{j})$
$x = -b, y = 4b$
**2/152** $x = 2.92$ m, $y = 6.33$ m
**2/153** $\mathbf{R} = F(0.5\mathbf{j} - 0.1340\mathbf{k})$
$\mathbf{M}_O = Fb(1.866\mathbf{i} + 0.268\mathbf{j} + \mathbf{k})$, yes
**2/154** $\mathbf{R} = 1000\mathbf{j} + 500\mathbf{k}$ N
$\mathbf{M}_O = 12\mathbf{i} - 300\mathbf{j} + 1200\mathbf{k}$ N·m
**2/155** $\mathbf{R} = -1.2\mathbf{j}$ lb, $\mathbf{M}_G = -30\mathbf{i} + 72\mathbf{k}$ lb-in.
**2/156** $\mathbf{R} = -8\mathbf{i}$ kN, $\mathbf{M}_G = 48\mathbf{j} + 820\mathbf{k}$ kN·m
**2/157** $\mathbf{R} = -266\mathbf{j} + 1085\mathbf{k}$ N
$\mathbf{M}_O = -48.9\mathbf{j} - 114.5\mathbf{k}$ N·m, no
**2/158** $\mathbf{R} = -20\mathbf{i} - 37.9\mathbf{j} + 12.65\mathbf{k}$ kN
$\mathbf{M} = 45.3\mathbf{j} + 40.9\mathbf{k}$ kN·m
**2/159** $y = -4$ m, $z = 2.33$ m
**2/160** $\mathbf{R} = 600\mathbf{j}$ lb, $\mathbf{M}_O = 1200\mathbf{i} + 4800\mathbf{k}$ lb-ft
$x = 8$ ft, $z = -2$ ft
**2/161** $\mathbf{R} = 4\mathbf{i} + 3\mathbf{j} - 6\mathbf{k}$ kN, $R = 7.81$ kN
$\mathbf{M} = -0.4\mathbf{i} - 4\mathbf{j} + 4\mathbf{k}$ kN·m, $M = 5.67$ kN·m
**2/162** $\mathbf{R} = 25\mathbf{i} - 60\mathbf{j} - 43.3\mathbf{k}$ lb
$\mathbf{M}_O = 1153\mathbf{i} - 830\mathbf{j} + 250\mathbf{k}$ lb-in.
**2/163** $\mathbf{R} = -20\mathbf{j} - 40\mathbf{k}$ lb, $\mathbf{M}_O = -56\mathbf{i} - 320\mathbf{j}$ lb-in.
$x = -6.4$ in., $y = 1.4$ in.
**2/164** $y = 0, z = \dfrac{7a}{2}, \mathbf{M} = -\dfrac{aT}{2}(\mathbf{i} + \mathbf{j})$
**2/165** $\mathbf{R} = F(\mathbf{i} - 3\mathbf{k}), \mathbf{M} = \dfrac{3aF}{10}(\mathbf{i} - 3\mathbf{k})$
$y = \dfrac{a}{10}, z = 2a$
**2/166** $x = 66.9$ mm, $z = 0$, $M = -99.6$ N·m
▶ **2/167** $x = a + c, y = \dfrac{b}{2}, \mathbf{M} = \dfrac{Fb}{2}(\mathbf{i} - \mathbf{k})$
▶ **2/168** $R = 44.7$ kN, $M = -26.9$ kN·m
$x = 0.221$ m, $y = -0.950$ m
**2/169** $\mathbf{T}_B = -\mathbf{T}_A = -1.664\mathbf{i} + 1.109$ kN
**2/170** $F = 20.7$ lb, $F_x = -5.36$ lb
**2/171** $\mathbf{M}_1 = -cF_1\mathbf{i}, \mathbf{M}_2 = F_2(c\mathbf{i} - a\mathbf{k}), \mathbf{M}_3 = -aF_3\mathbf{k}$
**2/172** $F = 300$ lb
**2/173** $x = 266$ mm
**2/174** $M_O = 189.6$ N·m CCW
**2/175** $d = 0.733$ m
**2/176** $R = 80$ lb down, $M_A = 1240$ lb-in. CW
$x = 15.5$ in.
**2/177** $R = 4.75$ kN, $M_A = 21.1$ kN·m CCW
**2/178** $\mathbf{M} = 864\mathbf{i} - 6720\mathbf{k}$ lb-in., $M = 6770$ lb-in.
**2/179** (*a*) $\mathbf{T}_{AB} = -2.05\mathbf{i} - 1.432\mathbf{j} - 1.663\mathbf{k}$ kN
(*b*) $\mathbf{M}_O = 7.63\mathbf{i} - 10.90\mathbf{j}$ kN·m
$(M_O)_x = 7.63$ kN·m, $(M_O)_y = -10.90$ kN·m
$(M_O)_z = 0$
(*c*) $\mathbf{T}_{AO} = 2.69$ kN
**2/180** $\mathbf{F} = F\left[\dfrac{h\mathbf{i} + r(\cos\theta - 1)\mathbf{j} + r\sin\theta\mathbf{k}}{\sqrt{h^2 + 2r^2(1 - \cos\theta)}}\right]$
**2/181** $\mathbf{T} = 282\mathbf{i} + 112.7\mathbf{j} - 398\mathbf{k}$ N, $M_z = -45.0$ N·m
**2/182** $\mathbf{M} = -20\mathbf{i} - 6.77\mathbf{j} - 37.2\mathbf{k}$ N·m
**2/183** $R = 1093$ lb, $M = 9730$ lb-ft
***2/184** $\theta = 21.7°$, $T = 1.022$ kN
***2/185** $T = \dfrac{12.5\left(\theta + \frac{\pi}{4}\right)\sqrt{d^2 + 80d\cos\left(\theta + \frac{\pi}{4}\right) - 3200\sin\left(\theta + \frac{\pi}{4}\right) + 3200}}{d\sin\left(\theta + \frac{\pi}{4}\right) + 40\cos\left(\theta + \frac{\pi}{4}\right)}$
***2/186** $(M_O)_{\max} = 0.5FR$ at $\theta = 60°$
***2/187** $M = \dfrac{90\cos\theta[\sqrt{0.34 + 0.3\sin\theta} - 0.65]}{\sqrt{0.34 + 0.3\sin\theta}}$
***2/188** $M_B = 104\sin(\theta + 50°)$ (lb-in.)
$M_A = 154.8\sin\theta + 79.7\cos\theta$ (lb-in.)
***2/189** $\mathbf{M}_O = \dfrac{-76.8\cos\theta\mathbf{i} + 38.4\cos\theta\mathbf{j} - 38.4\sin\theta\mathbf{k}}{\sqrt{1.44 - 1.28\sin\theta}}$
***2/190** $\mathbf{M}_O = \dfrac{3000(\sin\theta + \cos\theta)}{\sqrt{11 + 6(\sin\theta - \cos\theta)}}\mathbf{k}$ lb-ft
$(M_O)_{\max} = 1414$ lb-ft at $\theta = 16.87°$
***2/191** $F_x = [\sqrt{x^2 + 0.0325} - 0.15]\left[\dfrac{-200x_A}{\sqrt{x^2 + 0.0325}}\right]$
$F_y = [\sqrt{x^2 + 0.0325} - 0.15]\left[\dfrac{20}{\sqrt{x^2 + 0.0325}}\right]$
$F_z = [\sqrt{x^2 + 0.0325} - 0.15]\left[\dfrac{30}{\sqrt{x^2 + 0.0325}}\right]$
***2/192** $\mathbf{M}_O = \dfrac{\sqrt{1.5 - 0.5\sin\theta} - 1}{\sqrt{1.5 - 0.5\sin\theta}}[-518\mathbf{i} + 259\cos\theta\mathbf{k}]$ lb-ft
$(M_x)_{\max} = 95.1$ lb-ft at $\theta = 0$ and $\theta = \pi$
$(M_z)_{\max} = 47.6$ lb-ft at $\theta = 0$ and $\theta = \pi$

## Chapter 3

**3/1** $F_A = 566$ N, $F_B = 283$ N
**3/2** $N_A = 12$ lb down, $N_B = 24$ lb up
**3/3** $N_A = 15.91$ lb, $N_B = 13.09$ lb
**3/4** $A_y = 1864$ N, $B_y = 2840$ N
**3/5** $O_x = 1500$ N, $O_y = 6100$ N
$M_O = 7560$ N·m CCW
**3/6** $O_x = 0$, $O_y = 1736$ N, $M_O = 7460$ N·m CW
**3/7** $W = 162$ lb
**3/8** $T = 131.2$ lb
**3/9** (*a*) $P = 5.59$ N, (*b*) $P = 5.83$ N
**3/10** (*a*) $P = 6.00$ N, (*b*) $P = 6.25$ N
**3/11** $m = 1509$ kg, $x = 1052$ mm

**3/12** $P = 225$ N
**3/13** $T_{AC} = 215$ N, $T_{BC} = 264$ N
**3/14** $T = 81.2$ lb
**3/15** $\theta = 18.43°$
**3/16** $T = 160$ N
**3/17** $T = 90$ N, $O = 94.9$ N
**3/18** $N_A = 0.1091mg$, $O = 1.006mg$
**3/19** $m_1 = 0.436m$
**3/20** $F = 52.8$ N
**3/21** $P = 40$ lb
**3/22** $O = 64.6$ lb
**3/23** $N_A = N_B = 12.42$ kN
**3/24** $T = 38.3$ lb, $\overline{CD} = 5.23$ ft
**3/25** (*a*) $F_C = 1705$ N, (*b*) $F_C = 1464$ N
**3/26** $P = 111.1$ N
**3/27** $D_x = L$, $D_y = 1.033L$, $A_y = 1.967L$
**3/28** $F = 13.98$ N, $O = 48.8$ N
**3/29** $W_L = 550$ lb
**3/30** $T = 200$ lb, $A = 188.8$ lb
**3/31** $A_x = 869$ N, $A_y = 2350$ N, $M_A = 8810$ N·m CW
**3/32** $N_C = 0.433mg$, $O = 0.869mg$
**3/33** $N_A = 0.892mg$, $O = 0.580mg$
**3/34** $P = 166.7$ N, $T_2 = 1.917$ kN
**3/35** $B = 133.3$ N, $C = 253$ N
**3/36** $N_C = 18$ lb
**3/37** $R = 4.38$ kN
**3/38** $A = 1.082$ kN
**3/39** $F = 1832$ N
**3/40** $F_D = 710$ N, $O_x = 662$ N, $O_y = -185.6$ N
**3/41** $F = 753$ N, $E = 644$ N
**3/42** $F = 2.25W$, $O = 2.67W$
**3/43** $P = 45.5$ N, $R = 691$ N
**3/44** $C = 1276$ lb, $P = 209$ lb/in.$^2$
**3/45** $M = 41.5$ lb-ft, $F = 35.3$ lb
**3/46** (*a*) $n_A = -4.14\%$, $n_B = 4.98\%$
(*b*) $n_A = 3.15\%$, $n_B = -5.97\%$
**3/47** $n_A = -32.6\%$, $n_B = 2.28\%$
**3/48** $O = 4140$ N, $P = 2.58(10^6)$ Pa
**3/49** $R_B = 1382$ N, $O = 2270$ N
**3/50** $M = 4.94$ kN·m CCW
**3/51** $F = 121.7$ lb
**3/52** $P = 26.3$ N
**3/53** $T = 0.1176kL + 0.366mg$
**3/54** $O = 820$ lb
**3/55** $C = \dfrac{mg}{2}\left(\sqrt{3} + \dfrac{2}{\pi}\right)$, $F_A = 1.550mg$
**3/56** $A_x = 346$ N, $A_y = 1100$ N, $F_y = 1100$ N
**3/57** $F = 187.1$ lb
**3/58** $A = 1266$ N, $B = 1514$ N
**3/59** $M = 49.9 \sin\theta$ (N·mm) CW
▶**3/60** (*a*) $S = 0.669W$, $C = 0.770W$
(*b*) $S = 2.20W$, $C = 2.53W$
**3/61** $\mathbf{R} = -173.9\mathbf{i} - 46.6\mathbf{k}$ N
$\mathbf{M} = -9.32\mathbf{i} - 21.7\mathbf{j} + 34.8\mathbf{k}$ N·m
**3/62** $T_{AB} = T_{AC} = 47.8$ lb, $T_{AD} = 31.2$ lb
**3/63** $T_A = T_B = 20.4$ lb, $T_C = 27.2$ lb
**3/64** $T_{AB} = T_{AC} = 1698$ N, $D = 1884$ N
**3/65** $T_A = T_B = 278$ N, $T_C = 262$ N
**3/66** $O_x = 1.953$ lb, $O_y = -16.27$ lb, $O_z = 16.27$ lb
$M_x = 81.4$ lb-ft, $M_y = 9.76$ lb-ft
**3/67** $T_1 = 4.90$ kN
**3/68** $O = 300$ lb, $M = 8280$ lb-ft
**3/69** $O = \rho g(a + b + c)$, $M = \dfrac{\rho g}{2}\sqrt{\dfrac{a^4}{4} + \dfrac{b^4}{9}}$
**3/70** $m = 1509$ kg, $x = 1052$ mm, $y = -20.5$ mm
**3/71** $C$: $N_A = 2350$ N, $N_B = 5490$ N, $N_C = 7850$ N
$D$: $N_A = 3140$ N, $N_B = 4710$ N, $N_D = 7850$ N
**3/72** $O_x = 0$, $O_y = 0$, $O_z = \rho g(a + b + c)$
$M_x = \rho ga\left(\dfrac{a}{2} + b + c\right)$, $M_y = -\rho gb\left(\dfrac{b}{2} + c\right)$
$M_z = 0$
**3/73** $O_x = 1962$ N, $O_y = 0$, $O_z = 6540$ N
$T_{AC} = 4810$ N, $T_{BD} = 2770$ N, $T_{BE} = 654$ N
**3/74** $A_x = 48$ lb, $B_x = 12$ lb
**3/75** $\theta = 9.49°$, $\overline{X} = 118.0$ mm
**3/76** $O_x = 0$, $O_y = \rho gh(a + b + c)$, $O_z = 0$
$M_x = \rho ghb\left(\dfrac{b}{2} + c\right)$, $M_y = 0$
$M_z = \dfrac{\rho gh}{2}(ab + ac + c^2)$
**3/77** $A = 275$ lb, $B = 158.5$ lb, $C = 317$ lb
**3/78** $\Delta N_A = 66.1$ N, $\Delta N_B = 393$ N, $\Delta N_C = 522$ N
**3/79** $T_A = T_B = 5.41$ kN, $T_C = 9.87$ kN
**3/80** $T = 452$ lb, $T_0 = 267$ lb
**3/81** $\theta = 30°$
**3/82** $O_x = 869$ N, $O_y = 0$, $O_z = 2440$ N
$M_x = -524$ N·m, $M_y = 8700$ N·m
$M_z = 341$ N·m
**3/83** $F_S = 3950$ N, $F_A = 437$ N, $F_B = 2450$ N
**3/84** $R = mg/\sqrt{7}$
**3/85** $P = 2.72$ lb, $F_A = 1.896$ lb, $F_B = 0.785$ lb
$N_A = 15.58$ lb, $N_B = 12.95$ lb
**3/86** $k = 16.41$ lb/in.
**3/87** $\Delta N_A = 1000$ N, $\Delta N_B = \Delta N_C = -500$ N
**3/88** $B = 2.36$ kN
**3/89** $C = 100$ lb, $B_{xy} = 45.5$ lb, $A_{xy} = 38.0$ lb
**3/90** $P_{\min} = 18$ N, $B = 30.8$ N, $C = 29.7$ N
If $P = P_{\min}/2$: $D = 13.5$ N
**3/91** $A = 31.4$ lb, $B = 72.1$ lb
**3/92** $P = 0.206$ N, $A_y = 0.275$ N, $B_y = -0.0760$ N

**3/93** $F_B = 70$ lb, $D_n = 101.1$ lb
▶**3/94** $M = 47.7$ N·m, $V = 274$ N, $P = 321$ N
▶**3/95** $M_x = -1.857$ N·m, $M_y = 1.411$ N·m
$M_z = -2.56$ N·m, $B_z = 14.72$ N
▶**3/96** $T = 277$ N, $B = 169.9$ N
▶**3/97** $P = 50$ N, $N_C = 58.1$ N, $N_A = 108.6$ N
$N_B = 32.4$ N
▶**3/98** $T = 471$ N, $O = 144.9$ N
**3/99** $L = 1.676$ kN
**3/100** $R = 566$ N
**3/101** $A = 15$ lb, $B = 40$ lb, $T = 60.2$ lb
**3/102** $P = 351$ N
**3/103** $N_A = 159.9$ lb down, $N_B = 129.9$ lb up
**3/104** $N_A = \sqrt{3}g\left(\frac{m}{2} - \frac{m_1}{3}\right)$
(*a*) $m_1 = 0.634m$, (*b*) $m_1 = \frac{3}{2}m$
**3/105** $F_A = 486$ N down, $F_B = 686$ N up
**3/106** $T_1 = 45.8$ kN, $T_2 = 26.7$ kN, $A = 44.2$ kN
**3/107** $A' = 41.7$ lb
**3/108** $D = 7.60$ kN
**3/109** $\Delta F = 521$ N, $\Delta T = 344$ N
**3/110** $\bar{x} = 199.2$ mm
**3/111** $T_A = 147.2$ N, $T_B = 245$ N, $T_C = 196.2$ N
**3/112** $T = 1053$ N
**3/113** $F_A = 24.5$ lb
**3/114** $P = \frac{mg}{3\sqrt{2}}$
**3/115** $A = 183.9$ N, $B = 424$ N
▶**3/116** $O_x = -14\,900$ N, $O_y = 24\,400$ N, $O_z = 8890$ N
$M_x = -19\,390$ N·m, $M_y = -12\,120$ N·m
$M_z = 857$ N·m
***3/117** $T = mg\dfrac{\frac{\sqrt{3}}{2}\cos\theta - \frac{\sqrt{2}}{4}\cos(\theta + 15°)}{\cos\theta}$
***3/118** $T = \left[\dfrac{2750\cos\theta + 687\cos(\theta + 60°)}{4\sin(\theta + 60°)}\right] \times$
$[8 + 8\cos(\theta + 60°)]^{\frac{1}{2}}$
$\theta_{max} = 79.1°$
***3/119** (*a*) $R = \frac{1}{3}[400x^2 - 400x + 1072]^{\frac{1}{2}}$
(*b*) $R_{min} = 10.39$ kN at $x = \frac{1}{2}$ m
(*c*) $R_{max} = 24.3$ kN at $x = 3.8$ m
***3/120** $(T_{AC})_{max} = 600$ N at $x = 3.91$ m
$(T_{BC})_{max} = 600$ N at $x = 6.09$ m
***3/121** $\alpha = 14.44°$, $\beta = 3.57°$, $\gamma = 18.16°$
$T_{AB} = 529$ lb, $T_{BC} = 513$ lb, $T_{CD} = 539$ lb
***3/122** $\overline{AB} = 17.01$ ft, $\overline{CD} = 8.99$ ft
$T_{AB} = 503$ lb, $T_{BC} = 493$ lb, $T_{CD} = 532$ lb
***3/123** $T_{45°} = 5.23$ N, $T_{90°} = 8.22$ N
***3/124** $T = 0$ at $\theta = 1.729°$
***3/125** $T = \dfrac{51.1\cos\theta - 38.3\sin\theta}{\cos\theta}\sqrt{425 - 384\sin\theta}$
***3/126** $T = 495$ N at $\theta = 15°$

## Chapter 4

**4/1** $AB = 2350$ N $T$, $AC = 981$ N $T$
$BC = 2550$ N $C$
**4/2** $AB = 3400$ N $T$, $AC = 981$ N $T$
$BC = 1962$ N $C$
**4/3** $AB = 1.115W\,T$, $AC = 0.577W\,T$
$BC = 0.816W\,C$
**4/4** $AB = 5$ kN $T$, $AC = 5\sqrt{5}$ kN $T$
$BC = 5\sqrt{2}$ kN $C$ $AD = 0$, $CD = 15$ kN $C$
**4/5** $AC = 849$ lb $C$, $AD = 849$ lb $C$, $DE = 849$ lb $T$
**4/6** $AB = BE = CD = 1$ kN $T$
$AE = BD = 1.414$ kN $C$
$BC = 2$ kN $T$, $DE = 1$ kN $C$
**4/7** $AB = DE = 96.0$ kN $C$, $AH = EF = 75$ kN $T$
$BC = CD = 75$ kN $C$
$BH = DF = CG = 60$ kN $T$, $CH = CF = 48.0$ kN $C$
$GH = FG = 112.5$ kN $T$
**4/8** $AB = 14.42$ kN $T$, $AC = 2.07$ kN $C$, $AD = 0$
$BC = 6.45$ kN $T$, $BD = 12.89$ kN $C$
**4/9** $AB = 12$ kN $T$, $AE = 3$ kN $C$, $BC = 5.20$ kN $T$
$BD = 6$ kN $T$, $BE = 5.20$ kN $C$
$CD = DE = 6$ kN $C$
**4/10** $AB = 1000$ lb $T$, $AE = BC = DE = 707$ lb $T$
$DF = 1000$ lb $C$, $BE = CD = EF = 707$ lb $C$
**4/11** $AB = BC = \frac{L}{2}T$, $BD = 0$
**4/12** $AB = 6.61$ kN $T$, $AE = 21.0$ kN $T$
$BE = CD = 12.62$ kN $C$, $BC = 2.00$ kN $T$
$CE = 12.62$ kN $T$, $DE = 7$ kN $T$
**4/13** $AE = CD = 2000/\sqrt{3}$ lb $C$
$AB = BC = 1000/\sqrt{3}$ lb $T$
$BE = BD = 800/\sqrt{3}$ lb $T$, $DE = 1400/\sqrt{3}$ lb $C$
**4/14** $AB = 9\sqrt{3}$ kN $C$, $AE = 5\sqrt{3}$ kN $T$
$BC = \frac{26}{3}\sqrt{3}$ kN $C$, $BD = 3\sqrt{3}$ kN $C$
$BE = \frac{7}{3}\sqrt{3}$ kN $C$
$CD = \frac{13}{3}\sqrt{3}$ kN $T$, $DE = \frac{11}{3}\sqrt{3}$ kN $T$

**6/52** $k = 20.8(10^3)$ N/m
**6/53** $\mu_s = 0.1763$
**6/54** $\mu_s = 0.0262$
**6/55** $N = 5.66$ threads per inch
**6/56** $N_U = 53.5$ lb, $N_L = 50.8$ lb
**6/57** $\mu_s = 0.265$
**6/58** $\mu_s = 0.3$, $F_A = 1294$ N
**6/59** $P = 449$ N
**6/60** $P = 4.53$ kN
**6/61** $P' = 3.51$ kN
**6/62** $M = 24.8$ lb-in.
**6/63** $(a)$ $F = 8.52$ N, $(b)$ $F = 3.56$ N
**6/64** $P = 333$ N
**6/65** $P = 105.1$ N
**6/66** $(a)$ $P = 49.4$ lb, $(b)$ $P = 69.4$ lb
**6/67** $(a)$ $P' = 6.45$ lb left, $(b)$ $P' = 13.55$ lb right
**6/68** $F_A = F_B = 24.6$ N, $P = 98.6$ N
**6/69** $p = 2400$ kPa
**6/70** $M = 7.30$ N·m
**6/71** $M' = 3.02$ N·m
**6/72** $M = 30.9$ N·m
**6/73** $(a)$ $P = 78.6$ N, $(b)$ $P = 39.6$ N
▶**6/74** $\mu = 0.1222$
**6/75** $\mu = 0.271$
**6/76** $(a)$ $\mu = 0.1947$, $(b)$ $r_f = 3.82$ mm
**6/77** $M = 96$ lb-in., $\mu = 0.3$
**6/78** $T = 4020$ N, $T_0 = 3830$ N
**6/79** $T = 3830$ N, $T_0 = 4020$ N
**6/80** $\mu = 0.609$, $\phi = 31.3°$
**6/81** $(a)$ $P = 50$ lb, $(b)$ $P = 52.9$ lb
**6/82** $P = 47.2$ lb, No
**6/83** $M = \mu L \dfrac{r_o - r_i}{\ln(r_o/r_i)}$
**6/84** $T = 258$ N
**6/85** $T = 233$ N
**6/86** $M = \dfrac{1}{2}\mu PR$
**6/87** $T = 56.4$ N
**6/88** $F = 136.1$ N
**6/89** $M = \dfrac{4\mu P}{3}\dfrac{R_o^3 - R_i^3}{R_o^2 - R_i^2}$
**6/90** $T = 1069$ N, $T_1 = 1013$ N, $T_2 = 949$ N
**6/91** $T = 899$ N, $T_1 = 949$ N, $T_2 = 1013$ N
**6/92** $M = \dfrac{5}{8}\mu La$
**6/93** $M = \dfrac{2}{5}\mu_0 La$
**6/94** $\mu = 0.204$
**6/95** $M = 335$ N·m
▶**6/96** $M = \mu Pr$
**6/97** $\mu = 0.221$
**6/98** $(a)$ $P = 1007$ N, $(b)$ $P = 152.9$ N
**6/99** $\mu = 0.228$
**6/100** $T = 2.11$ kN
**6/101** $(a)$ $\mu = 0.620$, $(b)$ $P' = 3.44$ kN
**6/102** $P = 320$ N
**6/103** $P_x = 55.2$ N
**6/104** $T = 1720$ lb
**6/105** $P = 3.30$ kN
**6/106** $W = 24.5$ lb
**6/107** $P = 23.7$ lb
**6/108** $(a)$ $T_a = \dfrac{mg}{\sin\theta(1 + e^{-2\mu\theta})}$
$(b)$ $T_b = \dfrac{mg}{\sin\theta(1 + e^{2\mu\theta})}$
**6/109** $T = mge^{\pi\mu}$
***6/110** $\theta = 0$: $\dfrac{T}{mg} = 6.59$, $\theta \to \dfrac{\pi}{2}$: $\dfrac{T}{mg} \to e^{\pi\mu_B}$
**6/111** $P = 142.0$ lb
**6/112** $\mu = 0.768$
**6/113** $M = 1834$ lb-in.
**6/114** $h = 27.8$ mm
**6/115** $8.66 \le W \le 94.3$ lb
**6/116** $\mu = 0.214$
**6/117** $x = 0.813$ m
**6/118** $\mu = 0.1948$
**6/119** $T_2 = T_1 e^{\mu\beta/\sin(\alpha/2)}$, $n = 3.33$
▶**6/120** $T = \dfrac{\rho g r}{1 + \mu^2}\left[2\mu e^{\mu\pi/2} + 1 - \mu^2\right]$
**6/121** $(a)$ $T_{\max} = 76.0$ lb, $T_{\min} = 24.0$ lb
$(b)$ $F = 10$ lb
**6/122** $P = 93.7$ lb
**6/123** Rotates first at $P = 0.232mg$
**6/124** $R = 1855$ N
**6/125** $C = 273$ lb, $F = 68.2$ lb, $P' = 2.73$ lb
**6/126** $A$ and $B$ slip, $C$ does not slip
**6/127** $T = 7980$ N
**6/128** $M = 3.00$ kN·m, $\mu_{\min} = 0.787$
**6/129** $P = 913$ lb
**6/130** $(a)$ $F = 133.3$ N, $(b)$ $F = 127.6$ N
**6/131** $(a)$ $M = 24.1$ N·m, $(b)$ $M = 13.22$ N·m
**6/132** $\mu_s = 0.767$
**6/133** $(a)$ $0.304 \le m \le 13.17$ kg
$(b)$ $0.1183 \le m \le 33.8$ kg
**6/134** $M = 4.12$ lb-in., $M' = 1.912$ lb-in.
**6/135** $\mu = 0.368$
**6/136** $12.44 \le m \le 78.0$ kg
**6/137** $b = a + \dfrac{\mu_k^2 d}{2}$
**6/138** $W = 70.1$ lb
**6/139** $M = 10.16$ N·m

**6/140** $P = 25.3$ N

▶ **6/141** $d_{\min} = \dfrac{2r + (1 - \mu^2)R}{1 + \mu^2}$

$d_{\max} = R + 2r$

▶ **6/142** $(a)\ M = 35.7$ N·m, $(b)\ M' = 12.15$ N·m

***6/143** $P_{\min} = 517$ N at $x = 7.5$ m

***6/144** $\theta = 21.5°$

***6/145** $\theta_{\max} = 59.9°$, $P_{\max} = 0.295mg$

***6/146** $y = 0$: $\dfrac{T}{mg} = 21.2$; $y$ large: $\dfrac{T}{mg} \rightarrow 81.3$

***6/147** $\mu_k = 0.298$, $T = 30.7$ kN, $h = 58.1$ m

***6/148** $P_{\max} = 2430$ N, $\theta = 26.6°$

***6/149** $\mu_s = \dfrac{\sin\theta}{1 + \tan\theta(\tan\theta - \sin\theta)}$

$(a)\ 24.0° < \theta < 57.2°$

$(b)\ \theta = 41.8°$, $\mu_s = 0.554$

***6/150** $V = 0.867mg$

***6/151** $\mu = 0.420$

## Chapter 7

**7/1** $\theta = 2\tan^{-1}\left(\dfrac{4P}{mg}\right)$

**7/2** $M = mgl\sin\dfrac{\theta}{2}$

**7/3** $R = P\dfrac{b}{r}$

**7/4** $P = 2\rho gb$

**7/5** $\theta = \cos^{-1}\left(\dfrac{M}{mgb}\right)$

**7/6** $\theta = \tan^{-1}\left(\dfrac{2mg}{3P}\right)$

**7/7** $M = mg(b\cos\theta - a\sin\theta)$

**7/8** $Q = P\dfrac{b}{a}$

**7/9** $P = 4kl(\tan\theta - \sin\theta)$

**7/10** $R = 11.67P$

**7/11** $P = \dfrac{3}{2}mg$

**7/12** $F = 0.8R\cos\theta$

**7/13** $M = \dfrac{3}{2}mgl\sin\dfrac{\theta}{2}$

**7/14** $M = (C - mg)\dfrac{r}{n}$

**7/15** $e = 0.983$

**7/16** $C = P\sqrt{\left(\dfrac{2b}{h}\right)^2 - 1}$

**7/17** $\theta = \tan^{-1}\left(\dfrac{mg}{P}\right)$, no

**7/18** $F = \dfrac{mgl}{4h}\sin 2\theta$

**7/19** $e = 0.597$

**7/20** $F = mg\dfrac{R}{r}\sin\theta$

**7/21** $P = mg\dfrac{\cos\theta}{\cos\frac{\theta}{2}}$

**7/22** $M = 2mgb\sqrt{1 - \left(\dfrac{h}{2b}\right)^2}$

**7/23** $C = \dfrac{Pe(d + c)}{2bc}$

**7/24** $p = \dfrac{2mg}{A}$

**7/25** $P = 309$ lb

**7/26** $P = W$, no, $Q = \dfrac{W}{2}\left(1 + \dfrac{2e}{\sqrt{l^2 - h^2}}\right)$

**7/27** $P = \dfrac{2Feb}{c(b - a)}$

**7/28** $C = 2mg\sqrt{1 + \left(\dfrac{b}{L}\right)^2 - 2\dfrac{b}{L}\cos\theta\cot\theta}$

**7/29** $F = \dfrac{2\pi M}{L\sqrt{\tan\theta + \dfrac{a}{b}}}$

**7/30** $N = 1.6P$

**7/31** $\theta_1 = \cos^{-1}\left(\dfrac{2M}{3mgl}\right)$, $\theta_2 = \cos^{-1}\left(\dfrac{2M}{mgl}\right)$

**7/32** $M = 7.88$ N·m

**7/33** $P = 3.5$ kN

▶ **7/34** $Q = 13.18$ kN

**7/35** $x = 0$: unstable; $x = \dfrac{1}{2}$: stable; $x = -\dfrac{1}{2}$: stable

**7/36** $\theta = \cos^{-1}\left(\dfrac{mg}{2kb}\right)$, $k_{\min} = \dfrac{mg}{b\sqrt{3}}$

**7/37** $k_{\min} = \dfrac{mg}{4L}$

**7/38** $l < \dfrac{2R}{mg}$

**7/39** $(a)$ unstable, $(b)$ stable

**7/40** $x = \sqrt{\left(\dfrac{F}{k}\right)^2 - h^2} \quad \left(k < \dfrac{F}{h}\right)$

**7/41** $\theta = \sin^{-1}\left(\frac{M}{kb^2}\right)$

**7/42** $M > \frac{m}{2}$

**7/43** Stable

**7/44** $\theta = 0$ and $180°$: unstable
$\theta = 120°$ and $240°$: stable

**7/45** $\theta = 2\sin^{-1}\left[\frac{P + \frac{mg}{2}}{2kb}\right]$

**7/46** $K_{\min} = \frac{1}{2}mgl$

**7/47** $P = \frac{4kb^2}{a}\sin\theta\,(1 - \cos\theta)$

**7/48** $k = \frac{mg}{2b}$

**7/49** $h < \frac{2kb^2}{mg}$

**7/50** $\theta = \sin^{-1}\frac{M}{kb^2}, M < kb^2$

**7/51** $k < \frac{L}{2l}$

**7/52** $k = \frac{mgb}{a^2}$

**7/53** $h = \frac{mgr^2}{K}$

**7/54** $\theta = 0$: $k > \frac{2mg}{L}$ for stability
$\cos\theta = \frac{2mg}{kL}$: unstable

**7/55** $k_{\max} = 1.125$ lb/in.

**7/56** $\rho < 6r$

**7/57** $h < b\sqrt{2}$

**▶7/58** $M = \frac{(2m_1 + m_2)pg}{4\pi}\cot\theta$

**▶7/59** $k = \frac{mg(r + a)}{8a^2}$

**▶7/60** $h = 265$ mm

**7/61** $P = 1047$ N

**7/62** $\theta = 28.1°$

**7/63** $h_{\max} = 0.363r$

**7/64** $h < 2r$

**7/65** $F = 960{,}000$ lb

**7/66** $A$: $a, b, d$; $B$: $c, e, f$

**7/67** $h < r$

**7/68** $\mu_s = 0.1443$

**7/69** $\theta = -6.82°$: stable; $\theta = 207°$: unstable

**7/70** $x = 2.05$ m: stable

**7/71** $b_{\min} = \frac{2R}{3}$

**▶7/72** $k_{\min} = \frac{mg}{2b}\left(1 + \frac{b^2}{l^2}\right)$

**▶7/73** $\theta = 0$: stable if $k < \frac{mg}{a}$
$\theta = \cos^{-1}\left[\frac{1}{2}\left(1 + \frac{mg}{ka}\right)\right]$: stable if $k > \frac{mg}{a}$

***7/74** $x = 130.3$ mm

***7/75** $\theta = 23.0°$

***7/76** $V = 56.3x^2 - 231x$

***7/77** $\theta = 78.0°$: stable; $\theta = 260°$: unstable

***7/78** $\theta = 24.8°$: unstable

***7/79** $\theta = 71.7°$

***7/80** $\frac{R}{P} = 0.943\frac{\sin\left(\frac{\pi}{4} - \theta\right)}{\sin\theta}$

## Appendix A

**A/1** $A \cong 1600$ mm$^2$

**A/2** $I_x = \frac{bh^3}{3}, I_y = \frac{hb^3}{9}\, I_z = \frac{bh}{3}\left(h^2 + \frac{b^2}{3}\right)$

**A/3** $I_y = \frac{hb^3}{4}$

**A/4** $I_y = 21.5$ in.$^4$

**A/5** $A = 4800$ mm$^2$

**A/6** $I_x = \frac{bh^3}{4}, I_y = \frac{hb^3}{48}$
$I_z = \frac{bh}{4}\left(h^2 + \frac{b^2}{12}\right)$

**A/7** $I_A = \frac{3}{4}\pi r^4, I_B = r^4\left(\frac{3\pi}{4} - \frac{4}{3}\right)$

**A/8** $I_x = 4.38(10^6)$ mm$^4$

**A/9** $k_B = a/\sqrt{3}, k_O = a$

**A/10** $I_x = I_y = \frac{1}{2}\pi r^3 t, I_C = \pi r^3 t\left(1 - \frac{4}{\pi^2}\right)$

**A/11** $I_x = I_y = \frac{1}{3}Ab^2, I_O = \frac{2}{3}Ab^2$

**A/12** $I_x = 0.1963a^4, I_y = 1.648a^4, k_O = 1.533a$

**A/13** $k_A = 14.43$ mm

**A/14** $I_x = h^3\left(\frac{a}{4} + \frac{b}{12}\right), I_y = \frac{h}{12}(a^3 + a^2b + ab^2 + b^3)$
$I_O = \frac{h}{12}[h^2(3a + b) + a^3 + a^2b + ab^2 + b^3]$

**A/15** $I_x = \frac{4ab^3}{9\pi}$

**A/16** $k_x = 0.754, k_y = 1.673, k_z = 1.835$

**A/17** $I_{x'} = I_x = \dfrac{a^4}{24}$

**A/18** $I_x = h^3\left(\dfrac{b_2}{4} + \dfrac{b_1}{12}\right)$

$I_y = \dfrac{h}{48}(b_1^3 + b_1^2 b_2 + b_1 b_2^2 + b_2^3)$

**A/19** $I_y = \dfrac{\pi a^3 b}{4}, k_O = \dfrac{1}{2}\sqrt{a^2 + b^2}$

**A/20** $k_M = \dfrac{a}{\sqrt{6}}$

**A/21** $I_x = \dfrac{a^4}{28}, I_y = \dfrac{a^4}{20}$

**A/22** $n = -0.518\%$

**A/23** $I_{x'} = 0.315a^4$

**A/24** $I_y = 73.1(10^8)\ \text{mm}^4, I_{y'} = 39.0(10^8)\ \text{mm}^4$

**A/25** $I_x = 51.2\ \text{in.}^4$

**A/26** $I_x = \dfrac{16ab^3}{105}$

**A/27** $I_x = \dfrac{5}{8}\pi r^4, k_O = 1.830r$

**A/28** $I_x = 140.8\ \text{in.}^4$

**A/29** $k_y = 53.1\ \text{mm}$

**A/30** $I_x = \dfrac{a^4}{4}\left(\alpha + \dfrac{1}{2}\sin 2\alpha\right), I_y = \dfrac{a^4}{4}\left(\alpha - \dfrac{1}{2}\sin 2\alpha\right)$

**A/31** $I_{x'} = I_{y'} = I_x = I_y$

**A/32** $I_x = 25.6\ \text{in.}^4, I_y = 30.5\ \text{in.}^4, I_O = 56.1\ \text{in.}^4$

**A/33** $k_x = k_y = \dfrac{\sqrt{5}}{4}a, k_z = \dfrac{\sqrt{10}}{4}a$

▶ **A/34** $I_x = 0.1988r^4$

**A/35** $I_x = 0.0833bh^3, I_x = 0.0781bh^3$

**A/36** $I_y = 0.785R^4, I_y = 0.702R^4$

**A/37** $n = 3.68\%$

**A/38** $n_A = 50\%, n_{I_y} = 22.2\%$

**A/39** $k_x = k_y = \dfrac{\sqrt{5}}{4}a, k_z = \dfrac{\sqrt{10}}{4}a$

**A/40** $\bar{I}_x = 649\ \text{in.}^4$

**A/41** $I_x = 130.8(10^6)\ \text{mm}^4$

**A/42** $I_x = 4.94a^4, I_y = 3.37a^4$

**A/43** $I_x = 0.01825a^4, I_y = 0.1370a^4$

**A/44** $\bar{I}_x = 22.6(10^6)\ \text{mm}^4, \bar{I}_y = 9.81(10^6)\ \text{mm}^4$

**A/45** $I_x = \dfrac{58}{3}a^4$

**A/46** $n = 0.1953 + 2.34y^2, n = 9.57\%$

**A/47** $k_A = 78.9\ \text{mm}$

**A/48** $k_O = 7.92\ \text{in.}$

**A/49** $I_x = \dfrac{hb}{9}\left(\dfrac{7}{4}h^2 + \dfrac{2}{9}b^2 + hb\right), n = 176.0\%$

**A/50** $I_x = \dfrac{5\sqrt{3}}{16}a^4$

**A/51** $I_x = 254\ \text{in.}^4, I_{x_{\text{exact}}} = 245\ \text{in.}^4$

**A/52** $k_O = 0.778a$

**A/53** $k_C = 261\ \text{mm}$

**A/54** $I_x = h^3\left(\dfrac{b_2}{4} + \dfrac{b_1}{12}\right)$

$I_y = \dfrac{h}{48}(b_1^3 + b_1^2 b_2 + b_1 b_2^2 + b_2^3)$

**A/55** $h = 1.900\ \text{in.}$

**A/56** $I_x = 0.222h^4, I_y = 0.0281h^4, I_O = 0.251h^4$

**A/57** $I_x = 0.319a^4$

**A/58** $I_{x_0} = 6.24(10^6)\ \text{mm}^4$

**A/59** $I_O = 86.5(10^6)\ \text{mm}^4$

▶ **A/60** $b = 161.1\ \text{mm}$

**A/61** $(a)$ and $(c)$: $I_{xy} = 360(10^4)\ \text{mm}^4$

$(b)$ and $(d)$: $I_{xy} = -360(10^4)\ \text{mm}^4$

**A/62** $I_x = 2.44(10^8)\ \text{mm}^4, I_y = 9.80(10^8)\ \text{mm}^4$

$I_{xy} = -14.14(10^6)\ \text{mm}^4$

**A/63** $I_{xy} = 110.2\ \text{in.}^4$

**A/64** $(a)$ and $(c)$: $I_{xy} = 9.60(10^6)\ \text{mm}^4$

$(b)$: $I_{xy} = -4.71(10^6)\ \text{mm}^4$

$(d)$: $I_{xy} = -2.98(10^6)\ \text{mm}^4$

**A/65** $I_{xy} = \dfrac{1}{6}bL^3 \sin 2\alpha$

**A/66** $I_{xy_1} = I_{xy_3} = \dfrac{bL^3}{6}\sin 2\alpha$

$I_{xy_2} = I_{xy_4} = \dfrac{-bL^3}{6}\sin 2\alpha$

**A/67** $I_{xy} = 18.40(10^6)\ \text{mm}^4$

**A/68** $I_{xy} = \dfrac{1}{2}r^3 b, I_{x_0y_0} = \left(\dfrac{1}{2} - \dfrac{2}{\pi}\right)r^3 b$

**A/69** $I_{xy} = \dfrac{b^2h^2}{24}, I_{x_0y_0} = -\dfrac{b^2h^2}{72}$

**A/70** $I_{xy} = \dfrac{b^2h^2}{8}$

**A/71** $\bar{I}_{xy} = -0.01647r^4$

**A/72** $I_{xy} = -1968\ \text{in.}^4$

**A/73** $I_{xy} = \dfrac{2}{3}r^4$

**A/74** $A = 1.316(10^4)\ \text{mm}^2$

**A/75** $I_{xy} = \dfrac{h^2}{24}(3a^2 + 2ab + b^2)$

**A/76** $I_{xy} = \dfrac{1}{8}a^2b^2$

**A/77** $I_{xy} = \dfrac{r^4}{16}(1 - \cos 2\theta)$

**A/78** $I_{xy} = \dfrac{5}{16}s^4$

**A/79** $I_{xy} = \dfrac{1}{16}a^2b^2$

**A/80** $I_{x'} = 0.0277b^4$, $I_{y'} = 0.1527b^4$
$I_{x'y'} = 0.0361b^4$

**A/81** $I_{\max} = 3.79a^4$, $I_{\min} = 0.373a^4$, $\alpha = 111.5°$

**A/82** $I_{x'} = \frac{r^4}{16}(\pi - \sqrt{3})$, $I_{y'} = \frac{r^4}{16}(\pi + \sqrt{3})$, $I_{x'y'} = \frac{r^4}{16}$

**A/83** $I_x = 0.446b^4$, $I_y = 0.280b^4$

**A/85** $I_{\min} = 0.505a^4$, $I_{\max} = 6.16a^4$, $\alpha = 112.5°$

**A/86** $I_{\min} = 0.252b^4$, $I_{\max} = 3.08b^4$, $\alpha = -22.5°$

**A/87** $I_{\max} = 183.6 \text{ in.}^4$, $\alpha = -16.85°$

***A/88** $(I_{x'})_{\min} = 2.09(10^8) \text{ mm}^4$ at $\theta = 22.5°$

***A/89** $I_{\min} = 3.03(10^6) \text{ mm}^4$ at $\theta = 64.1°$

***A/90** $(I_{x'})_{\min} = 0.0432a^4$ at $\theta = 21.8°$
$(I_{x'})_{\max} = 1.070a^4$ at $\theta = 111.8°$
$(I_{y'})_{\min} = 0.0432a^4$ at $\theta = 111.8°$
$(I_{y'})_{\max} = 1.070a^4$ at $\theta = 21.8°$
$(I_{x'y'})_{\min} = -0.514a^4$ at $\theta = 66.8°$
$(I_{x'y'})_{\max} = 0.514a^4$ at $\theta = 156.8°$

***A/91** $I_{x'y'} = -203 \sin 2\theta - 192 \cos 2\theta$, $\theta = 68.3°$

***A/92** $I_{\max} = 1.820(10^6) \text{ mm}^4$, $\alpha = 30.1°$

***A/93** $I_{\min} = 0.0547b^4$ at $\theta = 41.1°$
$I_{\max} = 0.286b^4$ at $\theta = 131.1°$

***A/94** $I_{\min} = 20.8(10^6) \text{ mm}^4$ at $\theta = 9.26°$
$I_{\max} = 147.2(10^6) \text{ mm}^4$ at $\theta = 99.3°$

## Conversion Charts Between SI and U.S. Customary Units

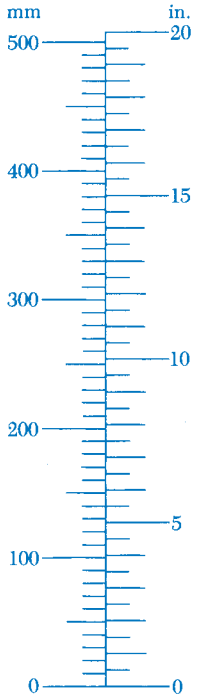


Length

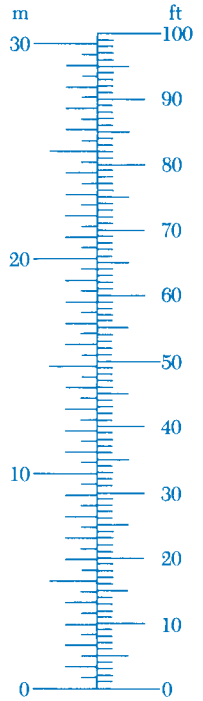


Length

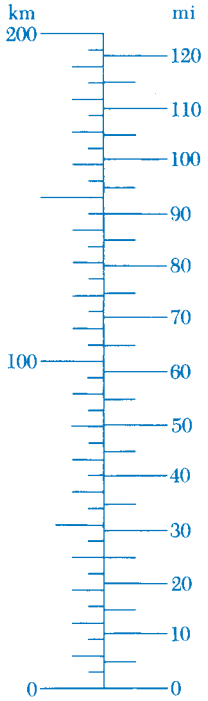


Length

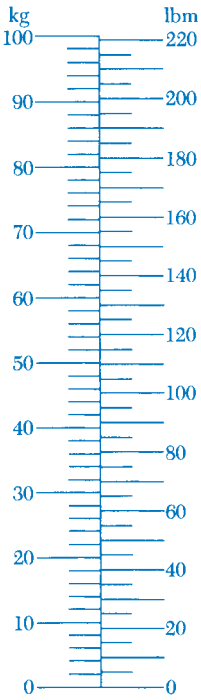


Mass

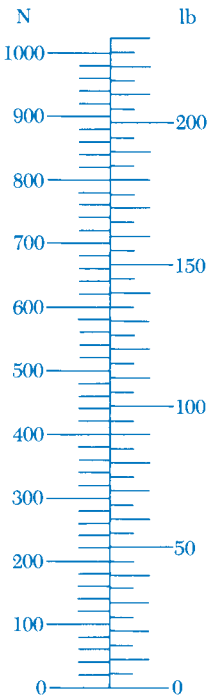


Force

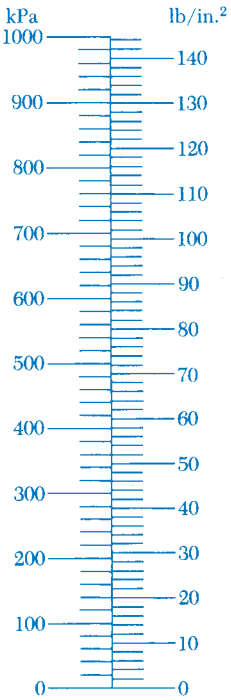


Pressure or Stress

## Conversion Charts Between SI and U.S. Customary Units (cont.)

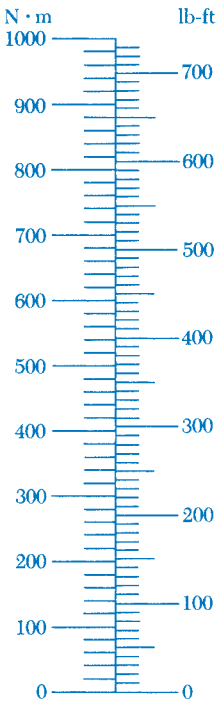


Moment or Torque

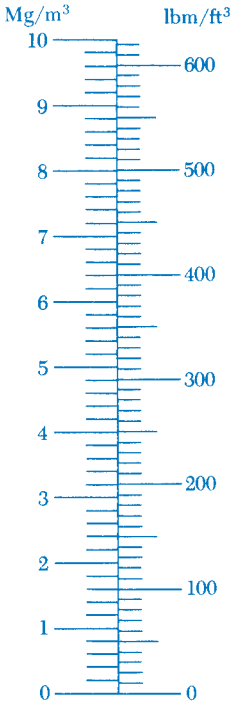


Density

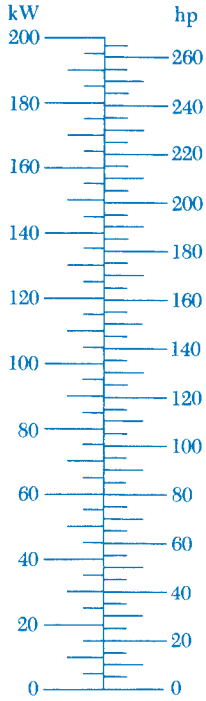


Power

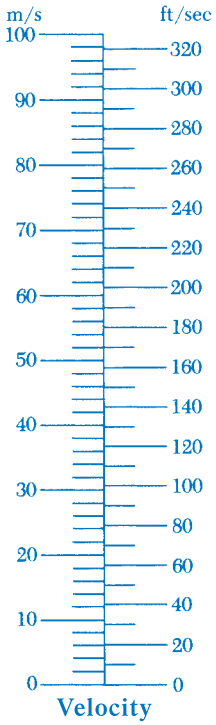


Velocity

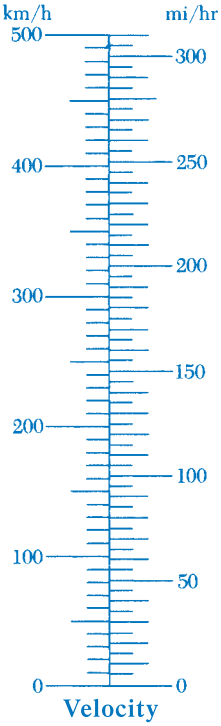


Velocity

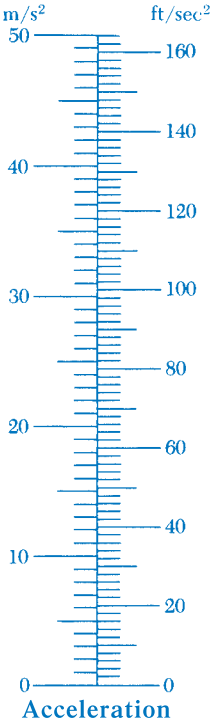


Acceleration